ANSI/ITSDF B56.6-2016
(Revision of ANSI/ITSDF B56.6-2011)

SAFETY STANDARD FOR ROUGH TERRAIN FORKLIFT TRUCKS

AN AMERICAN NATIONAL STANDARD

INDUSTRIAL TRUCK STANDARDS DEVELOPMENT FOUNDATION

Each B56 Standard is available free of charge from ITSDF. Each standard is copyrighted by ITSDF and may not be published, reproduced, distributed or otherwise made publicly available without the prior written consent of ITSDF. Please visit www.ITSDF.org to ensure that you have the most recent version.

Date of Issuance: May 20, 2016

ITSDF issues written replies to inquiries concerning interpretations of technical aspects of this Standard. Interpretations are published on the ITSDF Web site at http://www.itsdf.org as they are issued, and will also be published within the next edition of the Standard.

ITSDF is the registered trademark of Industrial Truck Standards Development Foundation.

This code or standard was developed under procedures accredited as meeting the criteria for American National Standards. The Standards Committee that approved the code or standard was balanced to assure that individuals from competent and concerned interests have had an opportunity to participate. The proposed code or standard was made available for public review and comment that provides an opportunity for additional public input from industry, academia, regulatory agencies, and the public-at-large.

ITSDF does not "approve," "rate," or "endorse" any item, construction, proprietary device, or activity.

ITSDF does not take any position with respect to the validity of any patent rights asserted in connection with any items mentioned in this document, and does not undertake to insure anyone utilizing a standard against liability for infringement of any applicable letters patent, nor assume any such liability. Users of a code or standard are expressly advised that determination of the validity of any such patent rights, and the risk of infringement of such rights, is entirely their own responsibility.

Participation by federal agency representative(s) or person(s) affiliated with industry is not to be interpreted as government or industry endorsement of this code or standard.

ITSDF accepts responsibility for only those interpretations of this document issued in accordance with the established ITSDF procedures and policies, which precludes the issuance of interpretations by individuals.

Industrial Truck Standards Development Foundation
1750 K Street NW, Suite 460, Washington DC 20006
http:\\www.itsdf.org

Copyright © 2016 by
INDUSTRIAL TRUCK STANDARDS DEVELOPMENT FOUNDATION
All rights reserved
Printed in the U.S.A.

CONTENTS

Foreword iii
Committee Roster iv
Summary of Changes v
General vi

Part I **Introduction** 1
1 Scope 1
2 Definition 1
3 Purpose 1
4 Interpretation 1

Part II **For the User** 3
5 General Safety Practices 3
6 Operating Safety Rules and Practices 9
7 Maintenance and Rebuild Practices 14

Part III **For the Manufacturer** 18
8 Design and Construction Standards 18

Part IV **Glossary of Commonly Used Words and Phrases** 46

Figures
1 Lifting Capacity for Center of Gravity of 48 in. Cube – Without Manually Operated Stabilizers 21
2 Lifting Capacity for Center of Gravity of 1200 mm Cube – Without Manually Operated Stabilizers 22
3 Longitudinal Stability – Stacking 26
4 Longitudinal Stability – Traveling 27
5 Lateral Stability – Stacking – Loaded 29
6 Later Stability – Traveling 30
7 Typical Fork 36
8 Overhead Guard Cube Drop Deformation Limit 37
9 Overhead Guard Impact Test Method 38
10 Overhead Guard Impact Deformation Limit 38

Tables
1 Tests for Stability 24
2 Load Handling Controls 34
3 Overhead Guard Impact Test Load 37

Mandatory Appendix
I References 51

FOREWORD

(This foreword is not part of ANSI/ITSDF B56.6-2016)

In response to requests from manufacturers and users, the B56 Committee established the B56.6 Subcommittee to create the Standard. The first Subcommittee meeting was held December 5, 1974.

Six Subcommittee meetings were held for preparation of the standard, and a proposed standard dated March 25, 1976 was presented to Sectional Committee members for study. The first edition of the standard was approved and published in 1978 as an American National Standard.

In August 1982, the B56.6 Subcommittee began working on a revision to the 1978 standard. The revised standard was subsequently approved by the B56 Committee and the sponsor. The American National Standards Institute approved the standard on January 23, 1987.

Following approval by the B56 Committee and ASME, and after public review, ASME B56.6-1992 was approved by ANSI on December 15, 1992.

The 2002 edition incorporates changes made in the B56.6a-1994 and B56.6b-1998 supplements, as well as additional revisions. It was approved for issuance as an American National Standard on April 9, 2002.

On September 1, 2005, management of the B56 Standards Committee and its subcommittees was transferred from ASME to the Industrial Truck Standards Development Foundation. This Standard was reaffirmed by the B56 Standards Committee after references to ASME were changed to ITSDF.

The 2011 reaffirmation was approved by the American National Standards Institute on August 26, 2011.

The 2016 edition of ANSI/ITSDF B56.6 was approved as a revision of ANSI/ITSDF B56.6-2011 by the American National Standards Institute on April 11, 2016.

This Standard shall become effective 1 year after its respective Date of Issuance. Part III applies only to trucks manufactured after the effective date.

Safety codes and standards are intended to enhance public health and safety. Revisions result from committee consideration of factors such as technological advances, new data, and changing environmental and industry needs. Revisions do not imply that previous editions were inadequate.

ITSDF STANDARDS COMMITTEE ROSTER B56
Powered and Nonpowered Industrial Trucks

(The following is the roster of the Committee at the time of approval of this Standard.)

OFFICERS

S.J. Simpson, *Chair*
J. E. Johnson, *Vice Chair*
C.F. Merther, *Secretary*

COMMITTEE PERSONNEL

Jimmy Eavenson, MTD Products, Inc.
Rudy Fiers, U.S. Department of Labor - OSHA
Dennis Graham, Ford Motor Company
Ron Graunstadt, U.A.W.
Mats Herrstromer, AGV Solutions
John Johnson, Johnson Engineering Services, Inc.
Donald Labelle, Betsie Bay Consulting
George Maes, KION
Steve McDermitt, Crown Equipment
David Norton, The Raymond Corporation
Rolland Riley, U.S. Army TACOM
Kenneth Sanders, East Penn Mfg. Co., Inc.
Stan Simpson, TekZone LLC
Ken Van Hook, Safe-T-Consultants
Richard Ward, MHI

SUBCOMMITTEE B56.6 – ROUGH TERRAIN FORKLIFT TRUCKS

Luke Webber, *Chair,* Terex
Richard Hoffelmeyer, *Vice Chair*, RLH Consulting LLC
Bob Backer, Blazing Technologies
Ted Clark, Superior Fabrication
Barris Evulich, Evulich & Associates
Stephen Forgas, JLG Industries
Bob Friedemann, R. C. Friedemann & Associates
Paul Guthorn, Vollmer-Gray Engineering
John Johnson, Johnson Engineering Services
Jack Kucksdorf, Manitou Americas
Dan Moss, AEM
Steve Neva, Bobcat Company
R. Kevin Smith, R. K. Smith Engineering, Inc.
Ronald Spear, R. L. Spear & Associates, Inc.
Ken Van Hook, Safe-T-Consultants

Alternates:
Rick Curtin, Terex
Joe Dobrowolski, Superior Fabrication
Sonny Lanaers, JLG Industries

ANSI/ITSDF B56.6-2016

SUMMARY OF CHANGES

Following approval by the ITSDF B56 Committee and after public review, ANSI/ITSDF B56.6-2016 was approved as a revision of ANSI/ITSDF B56.6-2005 on April 11, 2016. Areas of changed wording are indicated by the margin note “16.” Sections with changes include 5.15 Elevating Personnel, 6.2 General, 6.5 Operator Care of the Rough Terrain Forklift Truck, 8.10.5 Load Handling Symbols, 8.15 Protective Structures, Table 3 Overhead Guard Impact Test Load, 8.24 Personnel Work Platforms for Elevating Personnel, and Part IV Glossary of Commonly Used Words and Phrases.

SPECIAL NOTE:

The interpretations to ITSDF B56.6 are included in this edition as a separate section for the user’s convenience. The interpretations are not part of this edition or of the Standard itself.

POWERED AND NONPOWERED INDUSTRIAL TRUCKS

B56 SERIES INTRODUCTION

GENERAL

This Standard is one of a series that have been formulated with the Industrial Truck Standard Development Foundation as Sponsor in accordance with the Accredited Organization method, the procedures accredited by the American National Standards Institute, Inc., and the following scope:

> Establishment of the safety requirements relating to the elements of design, operation, and maintenance; standardization relating to principal dimensions to facilitate interchangeability, test methods, and test procedures of powered and nonpowered industrial trucks (not including vehicles intended primarily for earth moving or over-the-road hauling); and maintenance of liaison with the International Organization for Standardization (ISO) in all matters pertaining to powered and nonpowered industrial trucks.

One purpose of the Standard is to serve as a guide to governmental authorities having jurisdiction over subjects within the scope of the Standard. It is expected, however, that the Standard will find a major application in industry, serving as a guide to manufacturers, purchasers, and users of the equipment.

For convenience, Standards of Powered and Nonpowered Industrial Trucks have been divided into separate volumes:

Safety Standards

B56.1 Low Lift and High Lift Trucks
B56.5 Guided Industrial Vehicles and Automated Functions of Manned Industrial Vehicles
B56.6 Rough Terrain Forklift Trucks
B56.8 Personnel and Burden Carriers
B56.9 Operator Controlled Industrial Tow Trucks
B56.10 Manually Propelled High Lift Industrial Trucks

Standardization Standards

B56.11.1 Double Race or Bi-Level Swivel and Rigid Industrial Casters
B56.11.4 Hook-Type Forks and Fork Carriers for Powered Industrial Forklift Trucks
B56.11.5 Measurement of Sound Emitted by Low Lift, High Lift, and Rough Terrain Powered Industrial Trucks
B56.11.6 Evaluation of Visibility From Powered Industrial Trucks
B56.11.7 Liquefied Petroleum Gas (LPG) Fuel Cylinders (Horizontal or Vertical) Mounting – Liquid Withdrawal – for Powered Industrial Trucks
B56.11.8 Safety Standard for Seat Belt (Lap-Type) Anchorage Systems for Powered Industrial Trucks

Safety standards that were previously listed as B56 volumes but now have different identification due to a change in standards development assignments are as follows:

NFPA 505 Fire Safety Standard for Powered Industrial Trucks – Type Designations, Areas of Use, Maintenance and Operation (formerly B56.2)
UL 583 Standard for Safety for Electric-Battery-Powered Industrial Trucks (formerly B56.3)
UL 558 Standard for Safety for Internal Combustion Engine-Powered Industrial Trucks (formerly B56.4)

If adopted for governmental use, the references to other national codes and standards in the specific volumes may be changed to refer to the corresponding governmental regulations.

The use of powered and nonpowered industrial trucks is subject to certain hazards that cannot be completely eliminated by mechanical means, but the risks can be minimized by the exercise of intelligence, care, and common sense. It is therefore essential to have competent and careful operators, physically and mentally fit, and thoroughly trained in the safe operation of the equipment and the handling of the loads. Serious hazards are overloading, instability of the load, obstruction to the free passage of the load, collision with objects or pedestrians, poor maintenance, and use of equipment for a purpose for which it was not intended or designed.

Suggestions for improvement of these Standards, especially those based on actual experience in their application, shall be submitted to the Secretary of the B56 Committee, ITSDF, 1750 K Street NW, Suite 460, Washington DC 20006.

Comments shall be written in accordance with the following format:

(a) specify paragraph designation of the pertinent volume;

(b) indicate suggested change (addition, deletion, revision, etc.);

(c) briefly state reason and/or evidence for suggested change;

(d) submit suggested changes to more than one paragraph in the order in which they appear in the volume.

The appropriate B56 Subcommittee will consider each suggested revision at its first meeting after receipt of the suggested revision(s).

SAFETY STANDARD FOR ROUGH TERRAIN FORKLIFT TRUCKS

Part I
Introduction

1 SCOPE

This Standard defines the safety requirements relating to the elements of design, operation, and maintenance of rough terrain forklift trucks. These trucks are intended for operation on unimproved natural terrain as well as the disturbed terrain of construction sites.

2 DEFINITION

A *rough terrain forklift truck* is defined as a wheeled-type truck designed primarily as a fork truck with a vertical mast and/or a pivoted boom, variable reach or of fixed length, which may be equipped with attachments. This truck is intended for operation on unimproved natural terrain as well as the disturbed terrain of construction sites. This definition excludes machines designed primarily for earth moving, such as loaders and dozers, even though their buckets and blades are replaced with forks, and machines designed primarily as over-the-road trucks equipped with lifting devices.

3 PURPOSE

The purpose of this Standard is to promote safety through the design, construction, application, operation, and maintenance of rough terrain forklift trucks. This Standard may be used as a guide by governmental authorities desiring to formulate safety rules and regulations. This Standard is also intended for voluntary use by others associated with manufacture or utilizing rough terrain forklift trucks.

4 INTERPRETATION

4.1 Mandatory and Advisory Rules

To carry out the provisions of this Standard, all items in Parts II and III are mandatory except those including the word *should*, which are recommendations.

4.2 Classification of Approved Trucks

The word *approved* means the classification or listing of trucks as to fire, explosion, and/or electric shock hazard by a nationally recognized testing laboratory, i.e., a laboratory qualified and equipped to conduct examinations and tests such as those prescribed by Underwriters Laboratories, Incorporated.

4.3 Requests for Interpretation

The B56 Committee will render an interpretation of any requirement of this Standard. Interpretations will be rendered only in response to a written request sent to the Secretary of the B56 Committee, ITSDF, 1750 K Street NW, Suite 460, Washington DC 20006. The request for interpretation shall be in the following format.

Subject: Cite the applicable paragraph number(s) and provide a concise description.

Edition: Cite the applicable edition of the pertinent standard for which the interpretation is being requested.

Question: Phrase the question as a request for an interpretation of a specific requirement suitable for general understanding and use, not as a request for approval of a proprietary design or situation. The inquirer may also include any plans or drawings that are necessary to explain the question; however, they should not contain proprietary names or information.

ITSDF procedures provide for reconsideration of any interpretation when or if additional information that might affect an interpretation is available. Further, persons aggrieved by an interpretation may appeal to the cognizant ITSDF Committee or Subcommittee. ITSDF does not “approve,” “certify,” “rate,” or “endorse” any item, construction, proprietary device or activity.

4.4 Metric Conversions

The values stated in metric units are to be regarded as the standard.

PART II
FOR THE USER

5. GENERAL SAFETY PRACTICES

5.1 Introduction

5.1.1 Rough terrain forklift trucks can cause injury if improperly used or maintained.

5.1.2 Part II contains broad safety standards applicable to rough terrain forklift truck operations. Only authorized operators trained to adhere strictly to the operating instructions stated in Section 6 shall be permitted to operate rough terrain forklift trucks. Unusual operating conditions may require additional safety precautions and special operating instructions.

5.2 Modifications, Nameplates, Markings, and Capacity

5.2.1 Except as provided in 5.2.2, no modifications or alterations to a rough terrain forklift truck, which may affect the capacity, stability, or safe operations of the truck, shall be made without the prior written approval of the original truck manufacturer or its successor thereof. When the truck manufacturer or its successor approve a modification or alteration, appropriate changes shall be made to capacity plates, decals, tags, and operation and maintenance manuals.

5.2.2 In the event that the truck manufacturer is no longer in business and there is no successor in interest to the business, the user may arrange for a modification or alteration to a rough terrain forklift truck, provided however, the user shall:

(*a*) arrange for modification or alteration to be designed, tested, and implemented by an engineer(s) expert in rough terrain forklift trucks and their safety;

(*b*) maintain a permanent record of the design, test(s), and implementation of the modification or alteration;

(*c*) make appropriate changes to the capacity plate(s), decals, tags, and operation and maintenance manuals;

(*d*) affix a permanent and readily visible label on the truck stating the manner in which the truck has been modified or altered together with the date of the modification or alteration, and the name of the organization that accomplished the tasks.

5.2.3 If the rough terrain forklift truck is equipped with front end attachment(s) or optional forks, the user shall see that the truck is marked to identify the forks or attachment(s), show the approximate weight of the truck and fork or attachment combination, and show the capacity of the truck with forks or attachment(s) at maximum elevation with load laterally centered.

5.2.4 The user shall see that all nameplates and caution and instruction markings are in place and legible.

5.2.5 The user shall consider that changes in load dimension may affect rough terrain forklift truck capacity.

5.2.6 Where steering must be accomplished with either hand and the steering mechanism is of a type that prevents road reactions from causing the handwheel to spin (power steering or equivalent), steering knobs may be used. When used, steering knobs shall be of a type that can be engaged by the operator's hand from the top, and shall be within the periphery of the steering handwheel.

5.3 Stability

5.3.1 Experience has shown that rough terrain forklift trucks that comply with the stability requirements stated in para. 8.6 are stable when properly operated. However, improper operation, faulty maintenance, or poor housekeeping may contribute to a condition of instability and defeat the purpose of the Standard.

5.3.2 Some of the conditions that may affect stability are ground and floor conditions, grade, speed, loading (rough terrain forklift trucks equipped with attachments behave as partially loaded trucks even when operated without a load on the attachment), dynamic and static forces, improper tire inflation, and the judgment exercised by the operator.

5.3.3 Users shall give consideration to special operating conditions. The amount of forward and rearward tilt to be used is governed by the application. Although the use of maximum rearward tilt is allowable under certain conditions, such as traveling with the load lowered, the stability of a rough terrain forklift truck as determined by the tests outlined in para. 8.6 does not encompass consideration for excessive tilt at high elevations or the operation of truck with excessive off-center loads

5.3.4 Some users may decide to establish, for their own use, stability requirements that will vary from those in para. 8.6. However, the requirements in para. 8.6 should serve as a guide for the user, working with the manufacturer, in establishing his own more stringent requirements.

5.4 Safety Guards

5.4.1 Overhead Guards

5.4.1.1 Rough terrain forklift trucks shall be fitted with an overhead guard manufactured in accordance with para. 8.16.

5.4.1.2 An overhead guard is intended to offer protection to the operator from falling objects, but it cannot protect against every possible impact. Therefore, the overhead guard should not be considered a substitute for good judgment and care in loading, handling, storage, etc.

5.4.1.3 Under certain unusual operating conditions, a stronger guard, or one having openings of smaller size, may be specified by the user, working with the rough terrain forklift truck manufacturer.

5.4.2 Load Backrest Extension. A load backrest extension shall be used when necessary to guard against a load, or part of it, falling toward the operator.

5.5 Fuel Handling and Storage

5.5.1 The storage and handling of liquid fuels (such as gasoline and diesel fuel) shall be in accordance with ANSI/NFPA 505 and ANSI/NFPA 30.

5.5.2 The storage and handling of liquefied petroleum gas fuel shall be in accordance with ANSI/NFPA 505 and ANSI/NFPA 58.

5.6 Hazardous Locations

5.6.1 It shall be the responsibility of the user to determine the hazard classification of any particular atmosphere or location according to ANSI/NFPA 505.

5.6.2 Rough terrain forklift trucks operated in hazardous areas shall be approved and of the type required by ANSI/NFPA 505.

5.6.2.1 Depending on the proposed type of rough terrain forklift truck and area, approved trucks shall be built in compliance with UL 558.

5.6.2.2 Rough terrain forklift trucks and areas of use shall be marked in accordance with ANSI/NFPA 505.

5.7 Aisles and Obstructions

16 **5.7.1** Permanent aisles, roadways or passageways, floors, and ramps shall be defined in some fashion or marked to conform with ANSI Z535.1.

5.7.2 Permanent or temporary protrusions of loads, equipment, and material into the usual operating area shall be guarded, clearly and distinctively marked, or clearly visible.

5.8 Lighting for Operating Areas

5.8.1 Controlled lighting of adequate intensity should be provided in operating areas in conformance with ANSI/IES RP7.

5.8.2 Where operating conditions indicate, the user shall be responsible for having the rough terrain forklift truck equipped with lights.

5.9 Control of Noxious Gases and Fumes

5.9.1 Internal combustion engines deplete the oxygen supply within enclosed spaces and may create a hazard unless the oxygen is replaced.

5.9.1.1 Ventilation shall be provided in enclosed areas where internal combustion powered equipment is used, to maintain an atmosphere that shall not exceed the contamination levels specified by the American Conference of Governmental Industrial Hygienists “Threshold Limit Values of Airborne Contaminants.” This includes the atmosphere within the rough terrain forklift truck cab when a cab is provided.

5.9.1.2 Questions concerning degree of concentration and methods of sampling to ascertain the conditions should be referred to a qualified person.

5.10 Sound Level

Rough terrain forklift trucks can contribute to the ambient sound level in the work area. Consideration should be given to the sound exposure of personnel in the work area.

5.11 Dockboards (Bridge Plates)

5.11.1 Portable and powered dockboards shall be marked conspicuously with their carrying capacity. The carrying capacity indicated shall not be exceeded.

5.11.2 Portable dockboards shall be secured in position to prevent their slipping.

5.11.3 Handholds or other effective means shall be provided on portable dockboards to permit safe handling. Where possible, fork loops or lugs shall be provided for handling by rough terrain forklift trucks.

5.11.4 All types of dockboards shall have a high friction surface designed to reduce the possibility of employees or rough terrain forklift trucks slipping.

5.11.5 All types of dockboards shall be designed and maintained so that the end edges will have a substantial contact with the dock (or loading platform) and the transport vehicle to prevent the dockboard from rocking or sliding.

5.12 Rough Terrain Forklift Trucks and Railroad Cars

5.12.1 When rough terrain forklift trucks are driven on and off road trucks or trailers during the loading and unloading operation, the brakes on the road trucks and trailers shall be applied and wheel chock(s), or positive mechanical restraints which provide the equivalent protection of wheel chocks, shall be engaged.

5.12.2 Provision shall be made to prevent railroad cars from being moved during loading and unloading. Wheel stops, hand brakes, or other recognized positive means shall be used to prevent movement during loading and unloading.

5.12.3 Whenever rough terrain forklift trucks are driven on and off semitrailers not coupled to a tractor, supports may be needed to prevent upending or corner dipping.

5.12.4 Maintain a safe distance from the edge of ramps, platforms, or other similar working surfaces.

5.12.5 Do not move railroad cars or trailers with a rough terrain forklift truck unless the truck is properly designed and equipped for that operation.

5.13 Warning Device

5.13.1 Every rough terrain forklift truck shall be equipped with an operator-controlled horn, whistle, gong, or other sound-producing device(s). The user shall see that all warning devices are in place and in working order.

5.13.2 The user shall determine if operating conditions require the rough terrain forklift truck to be equipped with additional sound-producing or visual devices, and be responsible for providing and maintaining such devices.

5.14 Relocating Rough Terrain Forklift Trucks

When utilizing lifting equipment such as elevators, cranes, ship hoisting gear, etc., to relocate a rough terrain forklift truck, the user shall ensure that the capacity of the hoisting equipment being used is not exceeded.

16 5.15 Elevating Personnel

5.15.1 The following precautions pertain only to rough terrain forklift trucks equipped with personnel work platforms where the personnel work platform is not equipped with controls affecting the travel of the rough terrain forklift truck.

5.15.2 The user shall ensure that the rough terrain forklift truck is only used for lifting of personnel when the rough terrain forklift truck's manufacturer has approved the rough terrain forklift truck for such use, and the rough terrain forklift truck is equipped with the proper information plate(s) or load capacity chart specifically for the personnel work platform used.

5.15.3 The user shall ensure that the combined weight of the load and personnel on the personnel work platform does not exceed the capacity shown on the information plate(s) or load capacity chart as specified in 5.15.2.

5.15.4 The user shall ensure that the rough terrain forklift truck and personnel work platform are appropriate for the site and operating conditions where they are to be used.

The following precautions for the protection of personnel shall be taken:

(a) The personnel work platform shall comply with the design requirements stated in Part III of this

Standard.

(b) The personnel work platform shall be securely attached to the forks, or the quick interchange device.

(c) The lifting attachment and forks shall be secured to prevent them from tilting upward.

(d) Verify that protection is provided for personnel on the platform from moving parts of the rough terrain forklift truck that represent a hazard.

(e) For a personnel work platforms fitted to the lifting carriage and forks, the forks shall not protrude beyond any part of the platform when attached.

(f) Personnel work platforms may be used on rough terrain forklift trucks equipped with side swing and/or side shift attachments only if the rough terrain forklift truck manufacturer has specifically approved the rough terrain forklift truck and attachment for such use as found on the required information plate(s) and/or load capacity chart. If the rough terrain forklift truck attachment is equipped with side tilt, the user shall ensure that means for preventing the attachment from tilting laterally is installed and operating properly.

(g) Verify that overhead protection is provided as indicated to be necessary by the operating conditions.

(h) Any personnel work platform that has been damaged shall be tagged and removed from service until repaired. Repair of damaged platforms shall not be undertaken unless written approval has been obtained from the work platform manufacturer.

(i) Modifications shall not be made to the personnel work platform unless written approval has been obtained from the personnel work platform manufacturer, and the rough terrain forklift truck manufacturer. If the manufacturer of the personnel work platform, or the rough terrain forklift truck manufacturer is no longer in business, modifications of the personnel work platform shall be subject to the provisions of para. 5.2.2 as they relate to the rough terrain forklift truck manufacturer.

5.15.5 The user shall ensure that the rough terrain forklift truck operator, and for personnel work platforms equipped with controls for positioning the platform, the personnel work platform operator(s) has been trained in the use of the rough terrain forklift truck and the personnel work platform.

The rough terrain forklift truck and personnel work platform operator(s) shall take the following precautions for the protection of personnel:

(a) A trained rough terrain forklift truck operator shall operate the rough terrain forklift truck when the personnel work platform is not equipped with controls, or when such controls are not operational. When personnel on the personnel work platform are in position, the rough terrain forklift truck operator shall maintain communications with personnel on the personnel work platform, shall remain within visual contact of personnel on the personnel work platform, and shall remain within 25 feet (7.6 m) of the rough terrain forklift truck. A designated and trained personnel work platform operator shall be on the personnel work platform when the controls on the personnel work platform are operational unless another operating position is authorized by the manufacturer.

(b) Establish a means of communication between the rough terrain forklift truck operator and personnel work platform occupants. Alert personnel work platform occupants prior to moving the personnel work platform. Lift and lower personnel smoothly, with caution, and only at their request.

(c) The number of personnel on the personnel work platform shall not exceed that stated on the personnel work platform information plate. The load, including all personnel, material and equipment shall not exceed the maximum load capacity as stated on the personnel work platform information plate, or the rough terrain forklift truck information plate(s) or load capacity chart, whichever is less.

(d) The rough terrain forklift truck shall have firm footing. Stabilizers shall be in position and have firm footing if required by the information plate(s) or load capacity chart.

(e) Keep hands and feet clear of controls other than those used to position the personnel work platform.

(f) The lifting mechanism shall be operating smoothly through its entire lift range, both empty and loaded.

(g) Do not drive the rough terrain forklift truck while personnel occupy the personnel work platform.

(h) When in position to lift personnel, place the rough terrain forklift truck travel control(s) in neutral and set the parking brake.

(i) The path of platform travel shall be clear of hazards, e.g., scaffolds, overhead obstructions, and electrical conductors.

(j) The rough terrain forklift truck shall be level prior to lifting personnel. The operator shall not use the rough terrain truck's lateral leveling control when the personnel work platform is elevated.

(k) The personnel work platform shall be level prior to lifting. Should a final adjustment be needed, do so in accordance with *(l)*.

(l) Position the personnel work platform with occupants as slowly as practical, smoothly, with caution, and only at their request.

(m) The rough terrain forklift truck operator or personnel work platform operator shall not allow personnel under the elevated personnel work platform.

(n) Before elevating work platform personnel, the area shall be marked to warn of work by elevated personnel.

5.15.6 The user shall ensure that the occupants of the personnel work platform have been trained in the use of the equipment. The following precautions for the protection of personnel shall be taken:

(a) Personnel shall only enter or exit the personnel work platform through openings in the guardrails designed for personnel access. Personnel shall not climb on any part of the rough terrain forklift truck or on the guardrails of the personnel work platform.

(b) Personnel shall only enter or exit a personnel work platform while elevated, if allowed by the rough terrain forklift truck manufacturer, and shall only be done in accordance with their instructions.

(c) Guardrails around the full perimeter of the personnel work platform shall be in place unless the rough terrain forklift truck manufacturer approves the use of a personnel work platform with one or more of the guardrails removed. Only the guardrail(s) on side of the personnel work platform facing the work area may be removed. If one or more of the guardrails are removed personal fall protection equipment (PFPE) shall be used for each occupant.

(d) If required, each lanyard shall be attached at designated lanyard anchorage point(s) on the personnel work platform.

(e) The number of lanyards attached to a single lanyard anchorage point shall not exceed the manufacturer's stated limit.

(f) Any component of the personal fall protection equipment, e.g. full body harness, snap hook, lanyard, or deceleration device that has sustained permanent deformation or is otherwise damaged shall be replaced.

(g) Personnel shall maintain firm footing on the personnel work platform floor. Use of railings, planks, ladders, etc., on the personnel work platform for the purpose of achieving additional reach or height is prohibited.

5.15.7 In addition, personnel work platform occupants shall comply with the rough terrain forklift truck manufacturer, employer, job site and governmental rules regarding the use of personal fall protection equipment (PFPE).

5.16 Operator Qualifications

5.16.1 Only trained and authorized persons shall be permitted to operate a rough terrain forklift truck. Operators of rough terrain forklift trucks shall be qualified as to visual, auditory, physical, and mental ability to operate the equipment safely according to para. 5.17 and all other applicable parts of Section 5.

5.17 Operator Training

5.17.1 The user shall ensure that operators understand that the safe operation is the operator’s responsibility. The user shall ensure that operators are knowledgeable of, and observe, the safety rules and practices in paras. 6.1, 6.2, 6.3, 6.4 and 6.5.

5.17.2 An effective operator training program should center around user company’s policies, operating conditions, and rough terrain forklift trucks. The program should be presented completely to all new operators and not be condensed for those claiming previous experience.

5.17.3 Information on operator training is available from several sources, including rough terrain forklift truck manufacturers, users, government agencies, etc.

5.17.4 An operator training program should consist of:

(*a*) careful selection of the operator, considering physical qualifications, job attitude, and aptitude;

(*b*) emphasis on safety of stock, equipment, operator, and other personnel;

(*c*) citing of rules and why they were formulated;

(*d*) basic fundamentals of rough terrain forklift truck and component design as related to safety, e.g., in·lbf (N·m) loading, mechanical limitations, center of gravity, stability, etc.;

(*e*) introduction to equipment, control locations, and functions. Explain how they work when used properly and problems when used improperly.

(*f*) supervised practice on operating course remote from normal activity and designed to simulate actual operations, e.g., lumber stacking, elevating shingles to the roof, etc.;

(*g*) oral, written, and operational performance tests and evaluations during and at completion of the course;

(*h*) refresher courses, which may be condensed versions of the primary course, and periodic, “on job” operator evaluation;

(*i*) understanding of nameplate data and operator instructions and warning information appearing on the rough terrain forklift truck.

6 OPERATING SAFETY RULES AND PRACTICES

6.1 Operator Responsibility

6.1.1 Safe operation is the responsibility of the operator.

6.1.2 The equipment can be dangerous if not used properly. The operator shall develop safe working habits and also be aware of hazardous conditions in order to protect himself, other personnel, the rough terrain forklift truck, and other material.

6.1.3 The operator shall be familiar with the operation and function of all controls and instruments before undertaking to operate the rough terrain forklift truck.

6.1.4 Before operating any rough terrain forklift truck, truck operators shall have read and be familiar with the operator’s manual for the particular truck being operated; they shall also abide by the safety rules and practices in paras. 6.1, 6.2, 6.3, 6.4, and 6.5.

16 **6.2 General**

6.2.1 Read, understand and follow the manufacturer’s operating instructions, user’s safety rules, and all labels, warnings and instructions displayed on the rough terrain forklift truck and the attachment being used.

6.2.2 Only operate rough terrain forklift trucks in full compliance with applicable local, state, and federal rules and regulations.

6.2.3 Before use each day, or at the beginning of each shift, the rough terrain forklift truck shall be inspected to check its condition according to section 6.5.

6.2.4 Immediately report all accidents involving personnel, building structures, and equipment to the supervisor or as directed.

6.2.5 Before moving the rough terrain forklift truck into the workplace, always perform an inspection of the area to determine if it's suitable for safe operation. Do not move the rough terrain forklift_truck into the workplace if it’s not safe to do so.

6.2.6 If, during operation, any problem(s) or malfunction(s) become evident, or the rough terrain forklift truck becomes unsafe in any way, immediately stop using the rough terrain forklift truck and report the matter to the user's designated authority. The rough terrain forklift truck shall not be operated until it has been restored to a safe operating condition according to the manufacturer's instructions and specifications.

6.2.7 Always monitor the workplace for changing conditions that could create a potentially hazardous condition. Immediately report to a supervisor any potentially hazardous condition that becomes evident during operation.

6.2.8 Only operate the rough terrain forklift truck on surfaces capable of supporting the combined weight of the rough terrain forklift truck, the operator and the load.

6.2.9 Before starting to operate the rough terrain forklift truck the operator shall:

(a) be in the operating position;
(b) fasten the seat belt;
(c) ensure that the parking brake is applied;
(d) apply service brakes;
(e) place directional controls in neutral, and disengage clutch if equipped with manual transmission;
(f) start the engine.

6.2.10 Do not start or operate the rough terrain forklift truck, any of its functions or attachments, from any place other than from the designated operator's position, or other positions approved by the rough terrain forklift truck manufacturer.

6.2.11 Never put any part of the body, including hands and feet:

(a) outside the operator's compartment;
(b) between any moving component and another obstacle including but not limited to:
the load-handling structure;
the stabilizers;
the reach mechanism;
the rough terrain forklift truck attachment.

6.2.12 Understand the rough terrain forklift truck limitations and operate the rough terrain forklift truck in a safe manner so as not to cause injury to personnel. Safeguard personnel at all times and:

(a) never drive a rough terrain forklift truck up to anyone who is not aware of your presence, who is in your path of travel, or who is standing in front of an object.
(b) ensure that personnel stand clear of the front and rear swing areas before and when_maneuvering the rough terrain forklift truck.
(c) exercise particular care where personnel may step into the path of travel of the rough terrain forklift truck.

6.2.13 Do not allow anyone to stand or pass under the elevated portion of any rough terrain forklift truck, whether empty or loaded.

6.2.14 Do not permit passengers to ride on rough terrain forklift trucks unless a designated passenger compartment has been provided by the manufacturer (see 8.26). If the passenger seat is occupied, the operator shall operate the rough terrain forklift truck in a manner that ensures the passenger's safety, and the passenger shall:

(a) remain seated with seat belt fastened at all times except when entering and exiting;
(b) keep all parts of the body, including hands and feet, inside the passenger compartment;
(c) keep clear of, and make no contact with, the operating controls of the rough terrain forklift truck.

6.2.15 Check clearance carefully before driving under obstructions, e.g., electrical lines, bridges.

6.2.16 Always maintain the minimum required clearance to energized electrical conductors as outlined in the manufacturers operating instructions and defined by local, federal, or national regulations.

6.2.17 Check for underground utility services before using manufacturer-approved ground-engaging attachments (i.e. augers, buckets etc.). Contact the local utilities to have all underground utilities marked before breaking ground.

6.2.18 Take into account the effects of weather such as wind, rain and snow on the safe operation of the rough terrain forklift truck.

6.2.19 Maintain a safe distance from the edge of ramps, platforms, and other working surfaces.

6.2.20 Prior to loading or unloading a rough terrain forklift truck onto highway trucks and trailers, make sure the highway truck and trailer is:

(a) the appropriate size/capacity;
(b) properly supported/blocked;
(c) rated to take the weight of the lift truck and that uncoupled trailers are properly supported to prevent upending, tipping, or corner dipping.

6.2.21 In areas classified by NFPA 505 as potentially hazardous, use only rough terrain forklift trucks approved for use in those areas.

6.2.22 Always shut down the engine before fueling the rough terrain forklift truck. Fueling shall be done in a well-ventilated area free of flame, sparks or other hazards that may cause fire or explosion.

6.2.23 Do not modify the rough terrain forklift truck, or the attachment, without prior written consent from the manufacturer.

6.2.24 Do not use an attachment that has not been approved by the rough terrain forklift truck manufacturer, or if the required load chart is missing.

6.2.25 Do not block access to fire aisles, stairways, or fire equipment or park closer than 6 feet (1.8m) to a railway line;

6.2.26 A load backrest extension shall be used when necessary to guard against a load, or part of it, from falling toward the operator.

6.2.27 Before leaving the operating position:

(a) bring the rough terrain forklift truck to a complete stop;
(b) place directional control in neutral;
(c) apply the parking brake;
(d) position forks or other attachments flat on the ground. For variable reach rough terrain forklift trucks, fully retract and lower the boom. If there is a need to leave the boom elevated during storage, consult the manufacturer's instructions.
(e) turn off the engine;
(f) if the rough terrain forklift truck must be left on an incline, block the wheels;
(g) remove the key (if so equipped) when leaving the rough terrain forklift truck unattended. In the case where other means (e.g., key pad) are used to prevent use of a rough terrain forklift truck by unauthorized personnel these systems are to be used to turn off the power.

6.3 Traveling

6.3.1 On rough terrain forklift trucks equipped with individual wheel brake pedals, lock pedals together for simultaneous operation before travel on public roads or when changing job sites.

6.3.2 For rough terrain forklift trucks equipped with a differential lock, the lock should not be engaged when driving on the road or at high speeds or when turning. If the lock is engaged when turning, there could be loss of steering control.

6.3.3 Observe all traffic regulations including authorized speed limits. Under normal traffic conditions, keep to the right. Maintain a safe distance, based on speed of travel, from the truck ahead; and keep the truck under control at all times

6.3.4 Yield the right of way to pedestrians and emergency vehicles such as ambulances and fire trucks.

6.3.5 Do not pass another truck traveling in the same direction at intersections, blind spots, or at other dangerous locations.

6.3.6 Slow down and sound the audible warning device(s) at cross aisles and other locations where vision is obstructed.

6.3.7 Cross railroad tracks at an angle wherever possible. Do not park closer than 6 ft (1.8 m) to the nearest rail of a railroad track.

6.3.8 Keep a clear view of the path of travel and observe for other traffic, personnel, and safe clearances.

6.3.9 If the load being carried obstructs forward view, travel with the load trailing.

6.3.10 Ascend or descend grades slowly, and with caution.
(*a*) When ascending or descending grades in excess of 5%, loaded rough terrain forklift trucks shall be driven with the load upgrade.
(*b*) Unloaded rough terrain forklift trucks should be operated on all grades with the load-engaging means downgrade.
(*c*) On all grades, the load and load-engaging means shall be tilted back, if applicable, and raised only as far as necessary to clear the road surface.
(*d*) Avoid turning, if possible, and use extreme caution on grades, ramps, or inclines; normally travel straight up and down.

6.3.11 Under all travel conditions, operate the rough terrain forklift truck at a speed that will permit it to be brought to a stop in a safe manner.

6.3.12 Travel with load-engaging means or load low and, where possible, tilted back. Do not elevate the load except during stacking.

6.3.13 Make starts, stops, turns, or direction reversals in a smooth manner so as not to shift load and/or overturn the rough terrain forklift truck.

6.3.14 Do not indulge in stunt driving or horseplay.

6.3.15 Slow down for wet and slippery floors.

6.3.16 Before driving over a dockboard or bridge plate, be sure that it is properly secured. Drive carefully and slowly across the dockboard or bridge plate, and never exceed its rated capacity.

6.3.17 Do not drive rough terrain forklift trucks onto any elevator unless specifically authorized to do so. Approach elevators slowly, and then enter squarely after the elevator car is properly leveled. Once on the elevator, neutralize the controls, shut off engine, and set brakes. It is advisable that all other personnel leave the elevator before truck is allowed to enter or leave.

6.3.18 Avoid running over loose objects on the roadway surface.

6.3.19 When negotiating turns, reduce speed to a safe level, and turn steering handwheel in a smooth, sweeping motion. Except when maneuvering at a very low speed, turn the steering handwheel at a moderate, even rate.

6.3.20 Use special care when traveling without load, as the risk of lateral overturning is greater.

6.4 Loading

6.4.1 Improper use of stabilizer controls (if so equipped) could cause rough terrain forklift truck upset. Always lower the carriage before operating stabilizer controls.

6.4.2 For rough terrain forklift trucks equipped with lateral leveling:
(a) Always level the frame before raising the boom or mast, with or without load.
(b) Lateral leveling should not be used to position an elevated load; instead, lower the load and reposition the rough terrain forklift truck.

6.4.3 Handle only stable or safely arranged loads.
(*a*) When handling off-center loads that cannot be centered, operate with extra caution.
(*b*) Handle only loads within the capacity of the rough terrain forklift truck.
(*c*) Handle loads exceeding the dimensions used to establish rough terrain forklift truck capacity with extra caution. Stability and maneuverability may be adversely affected.

6.4.4 When attachments are used, extra care shall be taken in securing, manipulating, positioning, and transporting the load. Operate rough terrain forklift trucks equipped with attachments as partially loaded trucks when not handling a load.

6.4.5 Completely engage the load with the load-engaging means. Fork length should be at least two-thirds of load length. Where tilt is provided, carefully tilt the load backward to stabilize the load. Caution should be used in tilting backward with high or segmented loads (see paras. 5.3.3 and 6.4.6).

6.4.6 Use extreme care when tilting load forward or backward, particularly when high tiering. Do not tilt forward with load-engaging means elevated except to pick up or deposit a load over a rack or stack. When stacking or tiering, use only enough backward tilt to stabilize the load.

6.4.7 The handling of suspended loads by means of a crane arm (boom) or other device can introduce dynamic forces affecting the stability of a rough terrain forklift truck that are not considered in the stability criteria of para. 8.6. Grades and sudden starts, stops, and turns can cause the load to swing and create a hazard if not externally stabilized [see para. 6.4.7(a)(5)].
(*a*) When handling suspended loads:
(*1*) do not exceed the truck manufacturer's capacity of the rough terrain forklift truck as equipped for handling suspended loads;
(*2*) only lift the load vertically and never drag it horizontally;
(*3*) transport the load with the bottom of the load and the mast as low as possible;
(*4*) with load elevated, maneuver the rough terrain forklift truck slowly and cautiously, and only to the extent necessary to permit lowering to the transport position;
(*5*) use guy lines to restrain load swing whenever possible.

16

6.5 Operator Care of the Rough Terrain Forklift Truck

6.5.1 Before use each day, or at the beginning of each shift, the rough terrain forklift truck shall be inspected to check for proper operation and condition per the manufacturer's instructions, including but not limited to inspection of the following:

(a) instructions, warnings, control markings are in place and legible;
(b) operator's and safety manual(s) are in place and legible;
(c) load charts are in place and legible;
(d) no loose, damaged or missing parts;
(e) all operating and emergency controls;
(f) boom angle and chassis level indicators;
(g) horn, backup alarm, mirrors, seat belt;
(h) lights (if equipped);
(i) brakes and steering mechanism;
(j) lift and tilt systems and load-engaging means;
(k) chains, cables and limit switches;
(l) air and hydraulic systems;
(m) electrical cables and wiring;
(n) tires and their inflation pressure (if pneumatic);
(o) wheels and corresponding hardware (i.e. lug nuts);
(p) structural components, including stabilizing devices;
(q) personal protective devices which are part of the truck;
(r) fuel system(s);
(s) any attachments to be used;
(t) other items specified by the user and/or manufacturer.

6.5.1.1 If the rough terrain forklift truck is found to be in need of repair or in any way unsafe, or contributes to an unsafe condition, the matter shall be reported immediately to the user's designated authority, and the truck shall not be operated until it has been restored to safe operating condition.

6.5.2 If during operation the rough terrain forklift truck becomes unsafe in any way, the matter shall be reported immediately to the user's designated authority, and the rough terrain truck shall not be operated until it has been restored to safe operating condition.

6.5.3 Do not make repairs or adjustments unless specifically authorized and properly trained to do so.

6.5.4 When refueling, smoking in the area shall not be permitted, the engine shall be stopped, and the operator shall not be on the rough terrain forklift truck.

6.5.5 Spillage of oil or fuel shall be carefully and completely absorbed or evaporated. The oil and fuel tank caps shall be replaced before restarting engine.

6.5.6 Do not use open flames when checking electrolyte level in storage batteries, liquid level in fuel tanks, or the condition of connectors.

7 MAINTENANCE AND REBUILD PRACTICES

7.1 General

Rough terrain forklift trucks may become hazardous if maintenance is neglected. Therefore, maintenance facilities, trained personnel, and procedures shall be provided. Such facilities may be on or off the premises.

7.2 Specifications

Maintenance and inspection of all rough terrain forklift trucks shall be performed in conformance with the manufacturer's and user's recommendations and the following practices:

(*a*) a planned system for scheduled inspection, lubrication, maintenance, and adjustment shall be established and followed;

(*b*) only trained and authorized personnel shall be permitted to maintain, repair, adjust, and inspect rough terrain forklift trucks, and they shall do so in accordance with manufacturer's specifications.

7.2.1 Before starting inspection and repair of a rough terrain forklift truck:

(*a*) use chocks or other positive truck-positioning devices;

(*b*) block load-engaging means, innermast(s), or chassis before working on them;

(*c*) before disconnecting any part of the engine fuel system of gasoline-powered rough terrain forklift trucks with gravity-feed fuel systems, take precautions to eliminate any possibility of unintentional fuel escape;

(*d*) before disconnecting any part of the engine fuel system of LP gas-powered rough terrain forklift trucks, close the LP tank valve and run the engine until the fuel in the system is depleted and the engine stops. If the engine will not run, close the LP tank valve and vent fuel slowly in a nonhazardous area.

(*e*) disconnect battery before working on the electrical system.

7.2.2 Operation of the rough terrain forklift truck to check performance shall be conducted in an authorized area where safe clearance exists.

(*a*) Before starting to operate the rough terrain forklift truck:

(*1*) be in operating position and fasten seat belt, if so equipped;

(*2*) disengage clutch on manual transmission-equipped rough terrain forklift trucks, or apply brake on power shift or automatic transmission-equipped rough terrain forklift trucks;

(*3*) place directional controls in neutral;

(*4*) start engine;

(*5*) check functioning of lift and tilt systems, load-engaging means, steering, warning devices, and brakes.

(*b*) Before leaving the rough terrain forklift truck:

(*1*) stop truck;

(*2*) fully lower the load-engaging means;

(*3*) place directional controls in neutral;

(*4*) apply the parking brake;

(*5*) stop the engine;

(*6*) turn off the ignition circuit;

(*7*) if the truck must be left on an incline, block the wheels.

7.2.3 Avoid fire hazards and have fire protection equipment present in the work area. Do not use an open flame to check for level or leakage of fuel, battery, electrolyte, or coolant. Do not use open pans of fuel or flammable cleaning fluids for cleaning parts.

7.2.4 Properly ventilate work area, vent exhaust fumes, and keep shop clean and dry.

7.2.5 Handle LP gas cylinders with care. Physical damage such as dents, scrapes, or gouges may dangerously weaken the tank and make it unsafe for use.

7.2.6 Brakes, steering mechanisms, control mechanisms, warning devices, lights, governors, lift overload devices, guards and safety devices, lift and tilt mechanisms, articulating axle stops, and frame members shall be carefully and regularly inspected and maintained in a safe operating condition.

7.2.7 Special rough terrain forklift trucks or devices designed and approved for hazardous area operation shall receive special attention to ensure that maintenance preserves the original, approved safe operating features.

7.2.8 Fuel systems shall be checked for leaks and condition of parts. Extra special consideration shall be given in the case of a leak in the fuel system. Action shall be taken to prevent the use of the rough terrain forklift truck until the leak has been corrected.

7.2.9 All hydraulic systems shall be regularly inspected and maintained in conformance with good practice. Tilt cylinders, valves, and other parts shall be checked to ensure that “drift” or leakage has not developed to the extent that it would create a hazard.

7.2.10 The rough terrain forklift truck manufacturer’s capacity, operation, and maintenance instruction plates, tags, or decals shall be maintained in legible condition.

7.2.11 Rough terrain forklift trucks shall be kept in a clean condition to minimize fire hazards and facilitate detection of loose or defective parts.

7.2.12 Modifications and additions that affect capacity and safe rough terrain forklift truck operation shall not be performed without manufacturer’s prior written approval. Capacity, operation, and maintenance instruction plates, tags, or decals shall be changed accordingly.

7.2.13 Care shall be taken to ensure that all replacement parts, including tires, are interchangeable with the original parts and of a quality at least equal to that provided in the original equipment. Parts, including tires, are to be installed using all safety and applicable installation procedures.

7.2.14 When removing tires, follow industry safety practices. Most importantly, deflate pneumatic tires completely prior to removal from rims. Following assembly of tires on rims, use a safety cage or restraining device while inflating.

7.15 Inspection and Repair of Forks

(*a*) Forks shall be inspected at intervals not greater than 12 months or whenever permanent deformation is suspected. Severe applications shall warrant more frequent inspection. Inspection records shall be kept.

(*b*) Fork inspection shall be performed by trained personnel. The forks shall be carefully examined for the following:

Examination	Criteria
(1) Surface Cracks	Visual check or nondestructive testing
(2) Staightness of blade and shank	Within 0.5% of length of blade or height of shank
(3) Fork angle from upper face of blade to load face of shank	Not greater than 93 deg. or within 3 deg. of original specification
(4) Relative height of fork tips in set when mounted on fork carrier	Difference in height not to exceed 3% of length of blade
(5) Operation of positioning lock (if provided)	Good repair and correct operation
(6) Wear, especially in the area of heel	Thickness shall be within 10% of original specification or not less than minimum thickness as specified by fork manufacturer
(7) Fit of fork arm mounting hooks or eyes	Visual check for fit with no excessive wear or deformation between hooks and carrier of fork eye and shaft
(8) Markings	Shall be legible

If any of the above criteria are not met, the fork shall be withdrawn from service and shall not be returned to service until it has been repaired in accordance with para. 7.2.15(c).

(*c*) Only the fork manufacturer or an expert of equal competence shall decide if a fork may be repaired. The repairs shall always be carried out by such qualified personnel to the recommendations and specifications of the fork manufacturer. If a fork is not repairable, it shall be cut in two at the heel area. Repairs are subject to the following restrictions:

(*1*) Surface cracks or wear shall not be repaired.

(*2*) When straightness, fork angle, or tip height are reset, the fork shall be appropriately heat treated.

(*3*) A fork that has undergone any repairs, other than repair or replacement of the positioning lock or fork markings, shall pass load testing in accordance with para. 7.2.15(d) before being returned to service.

(*d*) The test load shall correspond to 2.5 times the rated capacity as marked on the fork. The load test shall be performed in the same manner as described in para. 8.14.3.

PART III
FOR THE MANUFACTURER

8 DESIGN AND CONSTRUCTION STANDARDS

8.1 Introduction

This Part sets forth safety standards for the design and construction of rough terrain forklift trucks at the time of manufacture.

8.2 Operating Instructions

The manufacturer shall provide an operator's manual covering the operation of the specific type of rough terrain forklift truck. A location to store manual(s) shall be provided on the truck.

8.3 Capacity

8.3.1 Capacity shall be established with a load equivalent to an unrestrained homogenous cube, with overall dimensions twice the specified load center distance.

8.3.2 Capacity shall be based on the strength of the various components of the rough terrain forklift truck and on stability tests specified in para. 8.6, and shall be expressed in pounds (kilograms), at a specified load center distance in inches (millimeters), that a truck can transport and stack to a specified elevation of the load-engaging means.

8.4 Rated Capacity

8.4.1 The rated capacity shall be established by the manufacturer with a load equivalent to an unrestrained homogeneous cube, with overall dimensions of twice the required load center dimension.

8.4.2 The rated capacity shall be based on the strength of the various components of the rough terrain forklift truck and on stability tests specified in para. 8.6.

8.4.3 The rated capacity for rough terrain forklift trucks is the maximum weight, expressed in pounds (kilograms), at the following load centers, that a truck can transport and stack to a height and/or reach established by the manufacturer:

(*a*) up to and including 30,000 lb at a 24 in. load center (13 600 kg at 600 mm);
(*b*) over 30,000 lb at a 24, 36, or 48 in. load center (13 600 kg at 600, 900, or 1200 mm).

8.4.3.1 If any of the foregoing trucks are equipped with manufacturer approved attachments, the rated capacity of that rough terrain forklift truck shall be established by the truck manufacturer and expressed in pounds (kilograms) at a specified load center and for a specified load elevation.

8.5 Nameplates and Markings (See Paras. 8.3 and 8.4)

8.5.1 The manufacturer shall stamp or otherwise permanently affix the serial number to the frame of the rough terrain forklift truck.

8.5.2 The following information shall be provided by the manufacturer on every rough terrain forklift truck, and shall be legibly and permanently inscribed on the lift truck, and/or durable corrosion resistant nameplate(s) and/or label(s):

(*a*) name and address (city, state, country are mandatory) of the manufacturer of the truck;
(*b*) model number;
(*c*) serial number,

(*d*) year of manufacture;

(*e*) identity of the originally equipped front end attachment (if the truck is not equipped with a device to allow quick interchange attachments);

(*f*) maximum weight of the unladen truck fully fueled and serviced, but without the operator, and;

(*1*) with the weight of forks or attachments(s) if the truck is not equipped with a device to allow quick interchange of attachments.

(*2*) without the weight of removable attachments if the truck is equipped with a device to allow quick interchange of attachments.

(*g*) capacity of the truck;

(*h*) capacity of the truck and attachment combination at maximum elevation of the load-engaging means with load laterally centered only if the truck is not equipped with a device to allow quick interchange of attachments;

(*i*) designation of compliance with the mandatory requirements of this Standard, applicable to the manufacturer.

8.5.3 Markings authorized by the appropriate nationally recognized testing laboratory shall be installed on approved rough terrain forklift trucks.

8.5.4 Vertical mast rough terrain forklift trucks shall be provided with a clearly legible chart, visible to the operator, in his operating position, giving load handling capacities in conformance with paras. 8.3 and 8.4. In addition, the rated capacity and capacities at other load centers and load elevations may be shown.

8.5.5 Rough terrain forklift trucks equipped with a telescopic boom that provides variable reach at variable elevations shall be provided with a clearly legible chart, visible to the operator in his operating position, giving load handling capacities in conformance with paras. 8.3 and 8.4 of this Standard. The load capacity chart shall show, as a minimum, the information shown in Figs. 1 and 2. Information shall be given with or without manually operated stabilizers and/or axle locks, if so equipped. Additional information may be included, if desired.

(*a*) A method of indicating boom angle in degrees shall be provided using 0 deg at the horizontal position of the boom and shall be visible to the operator in his operating position.

(*b*) A method of indicating boom extension shall be provided starting at minimum extension, and shall be clearly visible to the operator in his operating position.

(*c*) The load capacity chart shall have the above reference information included in such a manner that the position and capacity of the load carrying device(s) may be determined by the operator.

8.5.6 The following information shall be provided by the manufacturer on every removable attachment (excluding forks, fork extensions or other interchangeable attachment components), and shall be legibly and permanently inscribed on the removable attachment, and/or durable corrosion resistant nameplate(s) and/or label(s):

(*a*) name and address (city, state, country are mandatory) of the manufacturer of the attachment;

(*b*) model number;

(*c*) serial number;

(*d*) year of manufacture;

(*e*) maximum weight of the attachment. Those attachments having interchangeable components (such as carriages that accept different types of forks) shall specify the weight of the attachment with the heaviest interchangeable components;

(*f*) distance of the center of gravity of the unladen attachment from its mounting. This “mounting” may be:

(*1*) for fork mounted attachments, that portion of the attachment which contacts the vertical member of the fork.

(*2*) for attachments that fit on a quick interchange device, the vertical centerline of the point about which the quick interchange device pivots. The vertical centerline shall be established where the center of gravity of the attachment is furthest away from the pivot point.

(*g*) capacity of the attachment. For those attachments where the capacity may vary depending upon the capacity of interchangeable components such as carriages that accept different types of forks, the maximum capacity of the attachments with interchangeable components shall be specified;

(*h*) the maximum hydraulic operating pressure recommended by the attachment manufacturer (on hydraulically actuated attachments);

(*i*) the following instruction (or equivalent); capacity of the rough terrain forklift truck and attachment combination, and the forks, if part of this attachment, may be less than capacity shown on attachment. Refer to load capacity chart for the truck with this attachment, and individual load ratings stamped on forks, if they are required.

(*j*) designation of compliance with the mandatory requirements of this Standard, applicable to the manufacturer.

8.6 General Stability Criteria – Tilting Platform Tests

8.6.1 Rough terrain forklift trucks shall meet the design stability requirements set forth.

8.6.2 Design stability is the measure of a rough terrain forklift truck's resistance to overturning under rigidly controlled static conditions that include consideration for dynamic factors encountered in normal application and operation. Influencing factors include weight, weight distribution, wheelbase, wheel tread, method of suspension, truck speed, and tire and mast deflection under load.

8.6.3 Stability shall be determined by one of the following methods.

(*a*) *Tilting Platform Tests*. The tests described for the specific rough terrain forklift truck type verify truck stability. They may be used for confirming lift truck design and are intended to be applied to prototype trucks, but may also be applied to production trucks on a selective basis as required by the user or manufacturer.

(*b*) *Calculated Stability Values*. Calculations, based on empirical data for similar rough terrain forklift trucks, that include allowance for manufacturing variations and tire, mast, carriage, attachment, and other deflections, may be used to predict stability with reasonable accuracy.

(*c*) When comparing calculated and test values, the test values are considered the true measure of stability.

8.6.4 General – Conducting Tilting Platform Tests

(*a*) The tests shall be conducted on a completely operational rough terrain forklift truck with the least stable combination of tires and wheels offered by the manufacturer.

(*b*) The test platform shall have a rigid, flat surface; otherwise, measurements or effect of slope may be erratic.

(c) The rough terrain forklift truck being tested shall be placed on a platform that is initially horizontal and in the position specified for each of the required tests.

(*d*) The platform shall be tilted to the slope specified for each of the required tests. See Table1.

(*e*) The rough terrain forklift truck is considered stable if it does not overturn when the test platform is tilted to the specified platform slope values. *Overturn* is defined as the point at which the truck completely tips over, not the point at which a wheel(s) leaves the platform.

(*f*) When placed on the forks, the center of mass of the test load shall be located on the longitudinal centerline of the rough terrain forklift truck.

(*g*) The coefficient of friction of the platform surface may be increased, if necessary, by an appropriate friction-increasing material to prevent sliding.

(*h*) When attachments are supplied as original equipment, the rough terrain forklift truck shall be equipped with the attachment, and the test load shall be representative of the capacity of the truck with attachment.

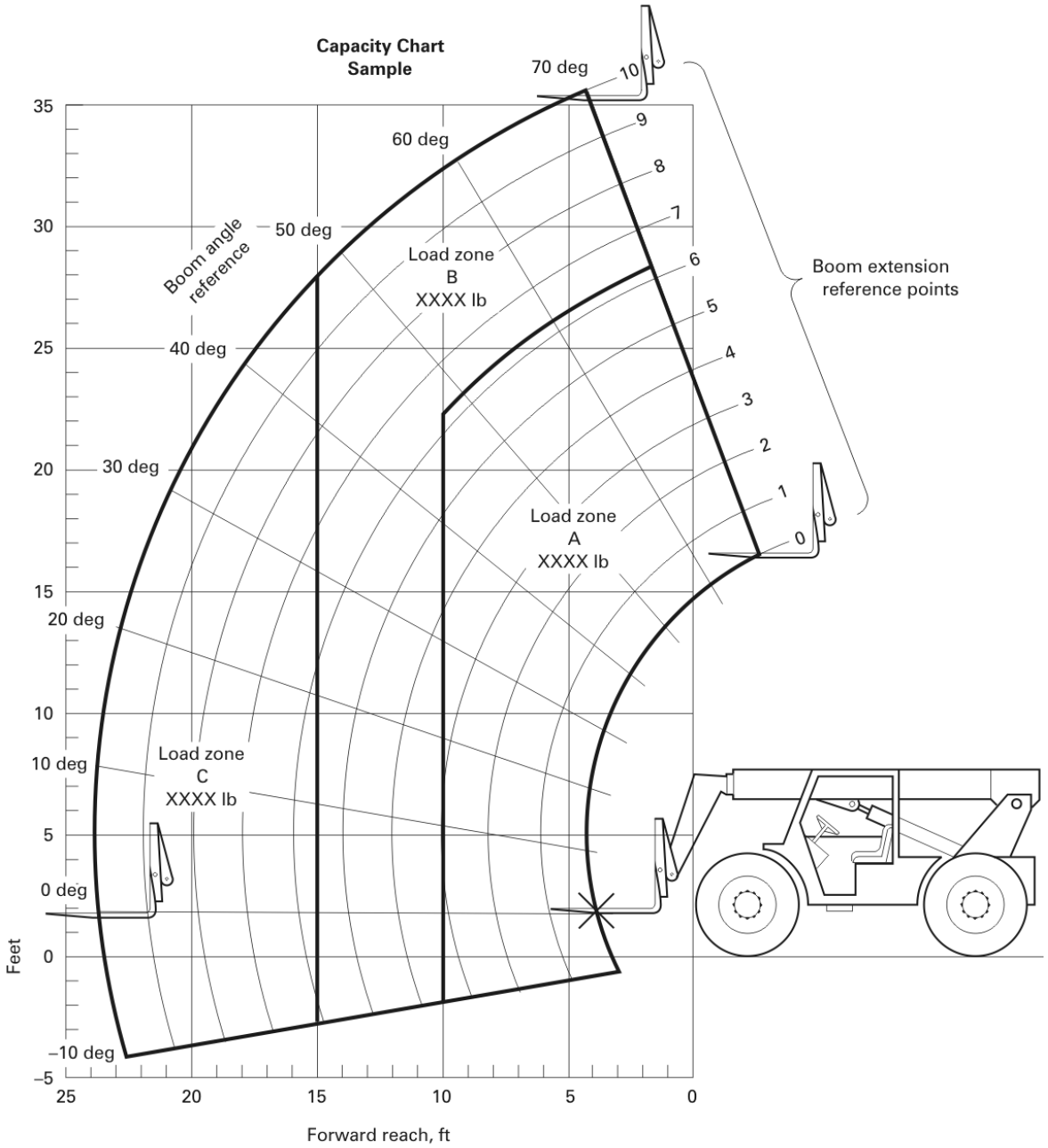

Fig. 1 LIFTING CAPACITY FOR CENTER OF GRAVITY OF 48 in. CUBE – WITHOUT MANUALLY OPERATED STABILIZERS
U.S. Customary Units

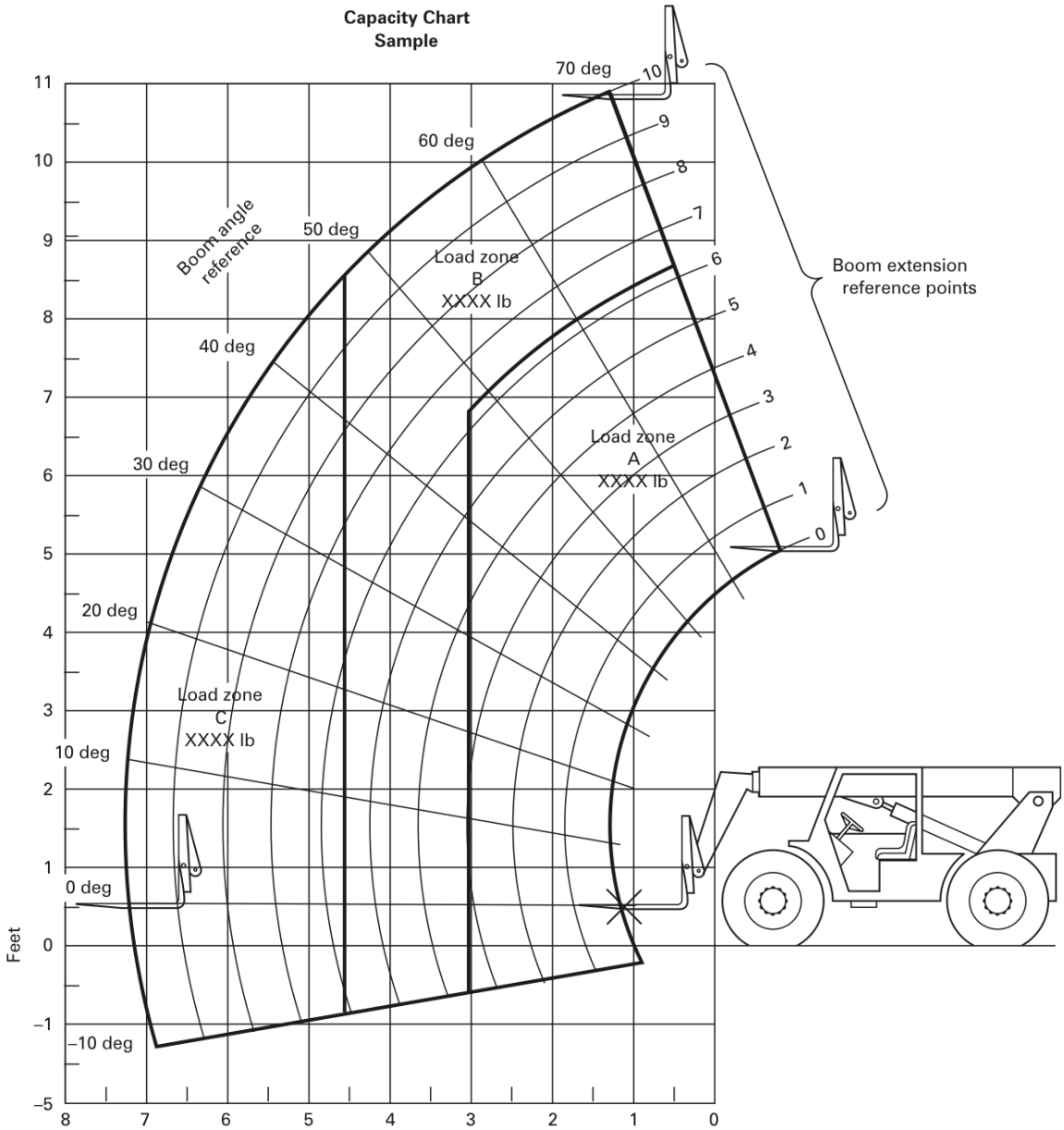

Fig. 2 LIFTING CAPACITY FOR CENTER OF GRAVITY OF 1200 mm CUBE – WITHOUT MANUALLY OPERATED STABILIZERS
Metric Units

8.6.5 Test Procedure Considerations

(*a*) Special precautions should be taken to prevent complete overturning of the rough terrain forklift truck or the displacement of the test load during the course of the tests. Provisions for preventing total overturning of the truck should impose no measurable restriction on the truck until the overturning moment occurs.

(*b*) Although the test load shall not be restrained in any manner that will affect the deflection of the forks or mast or free movement of the rough terrain forklift truck as the platform is tilted, the test load shall be secured against possible sliding on the forks in order to sustain an accurate load center and for safety reasons in case the truck tips past the balance point.

(*c*) For tests requiring an elevated load, it is permissible to simulate a load by hanging the test load from a framework supported by the forks in the manner described in para. 8.6.5(b). This point of suspension shall be on the centerline of the truck and at a height above the forks and at a distance from the front face of the forks equal to the rated load center dimension before the weight of the test load has caused the forks to deflect. The load shall be free to pivot in any direction around the point of suspension, such as by use of chain or cable.

(*d*) It is also permissible to use two test loads of equal weight suspended from the ends of a transverse beam fastened to a framework supported by the forks as described in para. 8.6.5(b), provided the loads are suspended from points equidistant from the rated load center location before the weight of the test load has caused the forks to deflect. The loads shall be free to pivot in any direction around the points of suspension, such as by use of chain or cable. The transverse beam shall be strong enough to prevent deflection that would shift the load center.

(*e*) If test load is to be supported on top of the forks, care shall be taken to see that it contacts the front face of the forks adjacent to the heel. For this purpose, the edge of the test load shall be chamfered to clear the radius at the heel of the fork.

(*f*) Upon completion of the tests, checks shall be made to make sure the center of gravity of the load has not changed from the original position. Forward drift may be prevented during test by means of a positive shutoff valve in the hydraulic tilt lines, or equivalent.

(*g*) On pneumatic tire rough terrain forklift trucks, tires shall be checked to make sure they are properly inflated. This is essential to provide accurate and repeatable results.

8.6.6 Test Load. The test load shall be such that its action corresponds to that of a homogeneous cube, the dimensions of which are twice the designated load center distance.

8.6.7 Summary of Tests for Stability. See Table 1.

TABLE 1
TESTS FOR STABILITY

Test Conditions						Rough Terrain Forklift Truck Elements				
				Platform Slope					Rough Terrain Forklift Truck Position References	
Test Number	Test	Operation	Load	Vertical Mast	Variable Reach	Lift Height and Reach	Rearward Tilt	Stabilizers and Axle Lock	Elevation	Plan
1	Longitudinal	Stacking	Rated Capacity	6%	7%	Least stable combination of lift and reach	See para. 8.6.8.7 (a)(2)(a)	With and without	Fig. 3, sketches (a) and (b)	Fig. 3, sketch (c), (d), or (e)
2	Longitudinal	Traveling	Rated Capacity	22%	22%	20 in. (500 mm) or a defined higher carry position; mast and/or carriage retracted	Max.	Without	Fig. 4, sketch (a) or (b)	Fig. 3, sketch (c), (d), or (e)
3	Lateral	Stacking	Rated Capacity	10%	12%	Least stable combination of lift and reach	Lesser of 10 deg or 24 in. (600 mm)	With and without	Fig. 5, sketch (a) or (b)	Fig. 5, sketch (c), (d), (e), or (f)
4	Lateral	Traveling	No Load	40%	50%	20 in. (500 mm) or a defined higher carry position; mast and/or carriage retracted	Max.	Without	Fig. 6, sketch (a) or (b)	Fig. 5, sketch (c) or (f)
5	Lateral	Stacking	No Load	10%	10%	Least stable combination of lift and reach	Max.	Without	Fig. 5, sketch (a) or (b)	Fig. 5, sketch (c) or (f)

8.6.8 Tilting Platform Tests

8.6.8.1 The following tests are designed to verify rated capacities of rough terrain forklift trucks having rated capacities up to and including 30,000 lb at 24 in. (13 600 kg at 600 mm) load center. If these tests are used to determine capacity, use appropriate loads and load centers instead of those herein specified. If other tests or tests for rough terrain forklift trucks over 30,000 lb (13 600 kg) rated capacity are required, the details shall be agreed upon between interested parties.

8.6.8.2 Follow the general criteria contained in para. 8.6.

8.6.8.3 A weight simulating an operator shall be used only when it will worsen the stability condition being tested. This shall be a 200 lb weight (90 kg) located with its center of gravity centered 6.2 in. (150 mm) above the Seat Index Point or H-Point of the truck, as determined according to ISO 5353.

8.6.8.4 For trucks where the quantity of fuel affects stability, use less than 15% of tank capacity or more than 90% of tank capacity, whichever will worsen the stability condition being tested.

8.6.8.5 For rough terrain forklift trucks with curved forks or attachments, the test load may be suspended as described in para. 8.6.5(c).

8.6.8.6 When attachments are supplied as original equipment, the same stability tests shall apply, except the lift height and plumb line shall be established from the underside of the carriage, attachment, or load, whichever is lowest.

8.6.8.7 Test 1 – Longitudinal Stability – Stacking. Using the procedure outlined for the test, a rough terrain forklift truck carrying the rated capacity load shall not overturn when the platform upon which the truck is standing is tilted about an axis parallel to the axis of the load wheels and in a direction to increase the load overhang. See Fig. 3.

(*a*) *Procedure for Longitudinal Stability – Stacking – Tilting Platform Test*

(*1*) Rough terrain forklift truck shall be placed on initially level platform with the axis of the load wheels parallel to the tilting axis of the platform.

Rough terrain forklift trucks with articulated frame steering shall be placed in fully articulated position. See Fig. 3, sketch (e).

(*2*) When placed on the rough terrain forklift truck, the center of mass of the test load shall be located on the longitudinal centerline of the truck.

(*a*) For rough terrain forklift trucks having a vertical mast only and which includes tilting capability with the test load supported approximately 20 in. (500 mm) above the platform, and in a normal and unrestrained manner with the stationary mast being vertical with the level platform, attach a plumb line at the theoretical intersection of the front and top surfaces of the forks to establish a reference point. This point will be used to indicate the maintaining of the original load overhang when the load is elevated to a specified elevation. (A transit may be used instead of a plumb line to establish verticality). Variations shall be corrected by use of the mast tilting feature within limits imposed by design on the rough terrain forklift truck.

(*b*) For variable reach rough terrain forklift trucks, raise the load to the least stable combination of lift and reach as determined by the manufacturer for all load zones (see Figs. 1 and 2).

(*3*) For rough terrain forklift trucks equipped with manually operated stabilizers and manually operated axle locks, Test 1 shall be conducted with stabilizers and axle locks both engaged and disengaged.

(*4*) For rough terrain forklift trucks equipped with lateral leveling, Test 1 shall be conducted with the lifting mechanism perpendicular to the platform surface.

(*5*) With the test load elevated as described in para. 8.6.8.7(b), and for rough terrain forklift trucks with tilting uprights without change in the original overhang dimensions, the test platform shall be tipped to the specified slope. The truck position on the platform shall be maintained by brakes or other similar means, but not by means of wheel chocks.

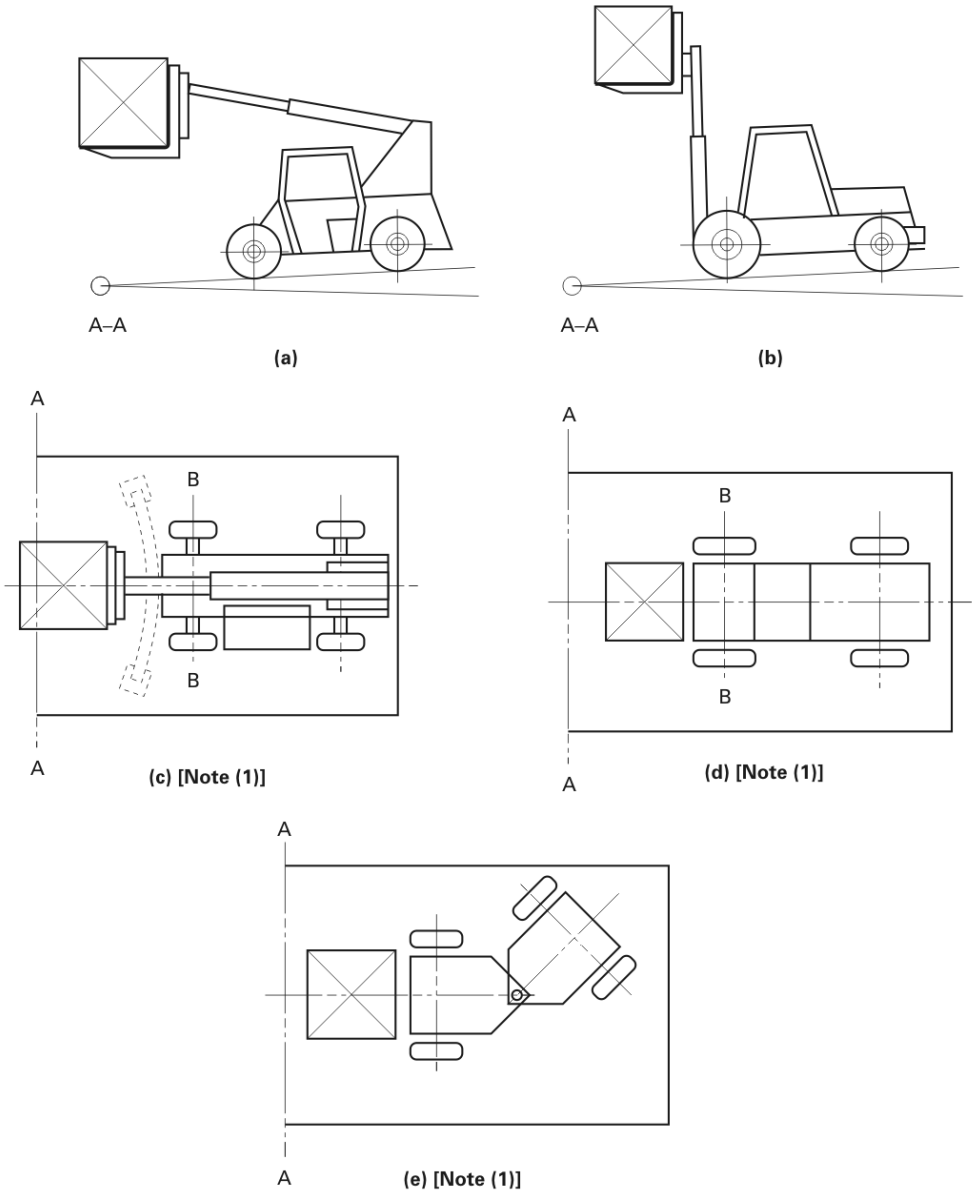

NOTE:
(1) In figures concerning stability testing, the following identifications apply:
A-A = test platform tilt axis
B-B = rough terrain forklift axis with minimum stability
Tilting platform tilted “up” about axis by raising opposite edge of platform.
Lateral stability tests shall be conducted with the rough terrain forklift truck positioned on the platform facing in the direction that produces the least stability.

FIG. 3 LONGITUDINAL STABILITY - STACKING

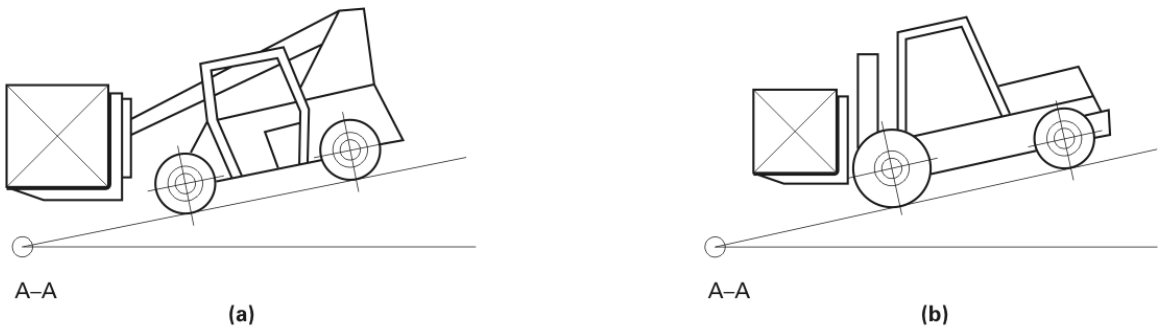

FIG. 4 LONGITUDINAL STABILITY – TRAVELING

8.6.8.8 Test 2 – Longitudinal Stability – Traveling. Using the procedure outlined for the test, a rough terrain forklift truck carrying rated capacity load at full rearward tilt and retracted position of the mast and/or carriage and with the load elevated 20 in. (500 mm) from the floor or at a defined higher carry position, measured at the point of intersection of the load carrying surfaces of the forks, shall not overturn when the platform upon which the truck is standing is titled about an axis parallel to the axis of the load wheels and in a direction to increase the load overhang. See Fig. 4, sketches (a) and (b).

(*a*) *Procedure for Longitudinal Stability – Traveling – Tilting Platform Test*

(*1*) The rough terrain forklift truck shall be placed on an initially level platform with the axis of the load wheels parallel to the tilting axis of the platform. Trucks with articulated frame steering shall be in the nonarticulated position.

(*2*) When placed on the forks, the center of the test load shall be located on the longitudinal centerline of the rough terrain forklift truck. The mast and/or carriage shall be at full rearward tilt and retracted position and the load then elevated until the point of intersection of the two load carrying surfaces of the forks is 20 in. (500 mm) from the floor or at a defined higher carry position.

(*3*) With the test load elevated as described, the test platform shall be tipped to the specified slope. The rough terrain forklift truck position on the platform shall be maintained by brakes or other similar means that do not affect stability.

(*4*) For rough terrain forklift trucks equipped with manually operated stabilizers and manually operated axle locks, Test 2 shall be conducted with stabilizers and axle locks disengaged.

(*5*) For rough terrain forklift trucks equipped with lateral leveling, Test 2 should be conducted with the lifting mechanism perpendicular to the platform surface.

8.6.8.9 Test 3 – Lateral Stability – Stacking. Using the procedure outlined for the test, a rough terrain forklift truck carrying rated capacity load shall not overturn when the platform upon which it is standing is tilted [for trucks with lateral leveling capability, refer to para. 8.6.8.9(f)]. See Fig. 5.

(*a*) *Procedure for Lateral Stability – Stacking – Tilting Platform Test*. Position the rough terrain forklift truck on an initially level platform as follows.

(*1*) For rough terrain forklift trucks with rear wheel or four wheel steering, position such that a line connecting the center of either load tire (or outermost tire where multiple tires are used) and the projection perpendicular to the platform at the point of intersection of the longitudinal centerline of the truck and a line connecting between centers of the rear tires is parallel to the axis of tilting of the platform. See Fig. 5, sketch (f).

(*2*) For rough terrain forklift trucks with articulated frame steering, position in the fully articulated position with the least stable axis of tilt parallel to the tilting axis of the platform. This may be the reverse steering position from that shown. See Fig. 5, sketch (c).

(*3*) For rough terrain forklift trucks of other configurations (skid steering, etc.), the least stable axis of tilt is to be determined and placed parallel to the tilting axis of the platform.

(*b*) For rough terrain forklift trucks equipped with masts only, test is to be conducted at maximum fork height.

(*c*) For variable reach rough terrain forklift trucks, test is to be conducted at the least stable combination of lift and reach as determined by the manufacturer for all load zones (see Figs. 1 and 2).

(*d*) For rough terrain forklift trucks equipped with tilt control, forks are to be tilted rearward a maximum of 10 deg. or the load center of gravity is to be moved a horizontal distance of 24 in. (600 mm) rearward by means of the tilting mechanism, whichever results in the lesser rearward load movement.

(*e*) For rough terrain forklift trucks equipped with manually operated stabilizers or manually operated axle locks, Test 3 shall be conducted with stabilizers and axle locks engaged and disengaged.

(*f*) Lateral leveling capability up to a maximum of 7% (4 deg) may be used in conducting the test as follows:

(*1*) place loaded rough terrain forklift truck on the platform;

(*2*) tilt platform to the degree of frame leveling desired;

(*3*) level rough terrain forklift truck frame;

(*4*) raise load;

(*5*) tilt platform to the required slope

(*g*) Platform shall be tipped to the specified slope. The rough terrain forklift truck position on the platform shall be maintained by brakes or other similar means that do not affect stability.

(*h*) For rough terrain forklift trucks up to and including 10,000 lb (4500 kg) rated capacity, equipped with a side shifter or a shifting mast:

(*1*) capable of shifting off center 4 in. (100 mm) or less in either direction, test on center;

(*2*) capable of shifting off center more than 4 in. (100 mm), test at extreme shift downgrade.

(*i*) For rough terrain forklift trucks over 10,000 lb (4500 kg) up to and including 30,000 lb (13 600 kg) rated capacity, equipped with a side shifter or shifting mast:

(*1*) capable of shifting off center 6 in. (150 mm) or less in either direction, test on center;

(*2*) capable of shifting off center more than 6 in. (150 mm) in either direction, test at extreme shift downgrade.

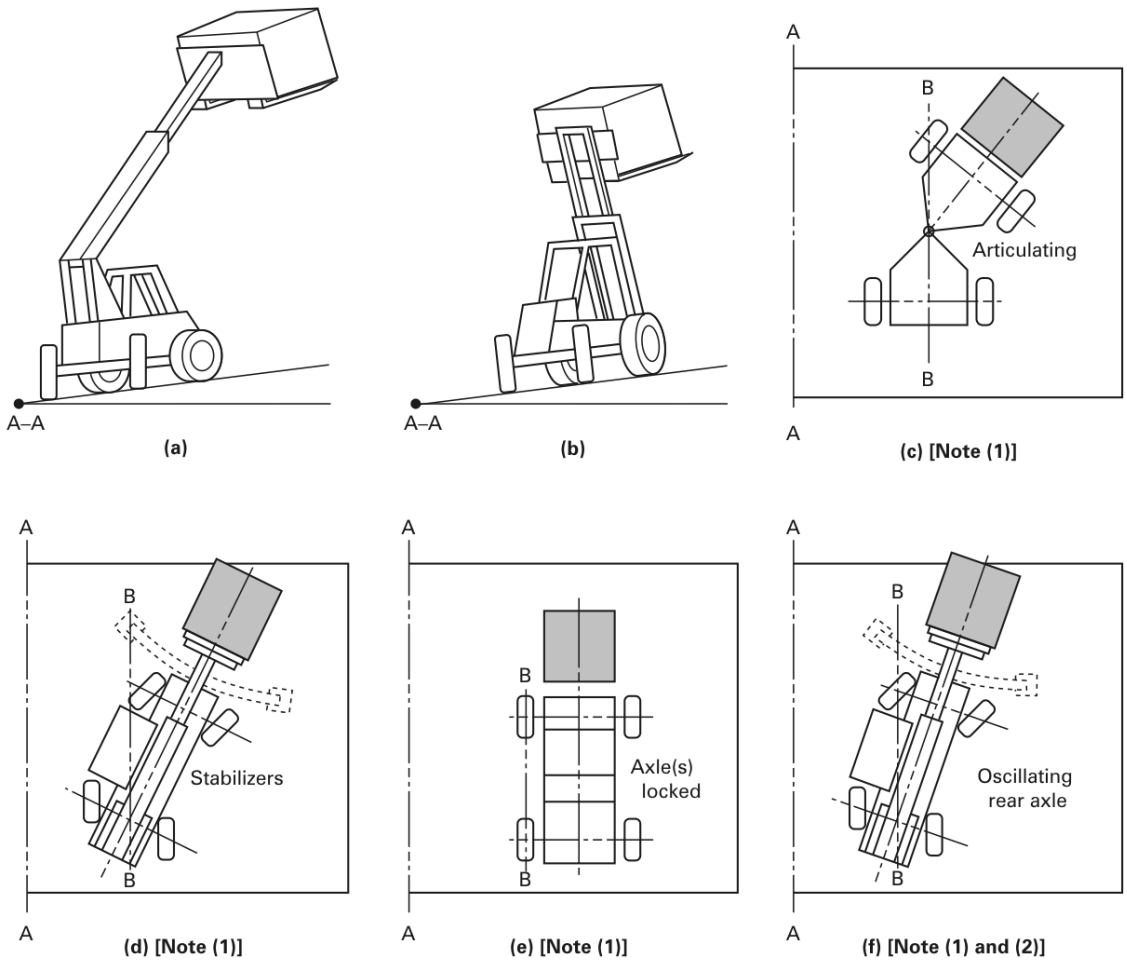

FIG 5 LATERAL STABILITY – STACKING – LOADED

NOTE:
(1) In figures concerning stability testing, the following identifications apply:
A-A = test platform tilt axis
B-B = rough terrain forklift axis with minimum stability
Tilting platform tilted “up” about axis by raising opposite edge of platform.
Lateral stability tests shall be conducted with the rough terrain forklift truck positioned on the platform facing in the direction that produces the least stability.
(2) For rough terrain trucks equipped with four wheel steering, steered wheels shall be in least stable position.

8.6.8.10 Test 4 – Lateral Stability – Traveling. Using the procedure outlined for the test, an empty rough terrain forklift truck at full rearward tilt of the mast and/or carriage and with the forks elevated 20 in. (500 mm) from the floor, measured at the point of intersection of the load carrying surfaces of the forks (or with the load carrying means supported on a defined higher carry position support), shall not overturn when the platform upon which the truck is standing is tilted. See Fig. 6, sketches (a) and (b).

(*a*) *Procedure for Lateral Stability – Traveling – Tilting Platform Test*

(*1*) Place empty rough terrain forklift truck on an initially level platform in a position as described in para. 8.6.8.9(a).

(*2*) The mast and/or carriage shall be at full rearward tilt and the forks then elevated until the point of intersection of the two load carrying surfaces of the forks is 20 in. (500 mm) from the floor (or with the load supported on a defined higher carry position support).

(*3*) With the forks elevated as described, the test platform shall be tipped to the specified slope. The rough terrain forklift truck position on the platform shall be maintained by brakes or other similar means that do not affect stability. Wheel chocks may be used to prevent movement but their height is not to exceed 5% of the tire diameter.

(*4*) For rough terrain forklift trucks equipped with manually operated stabilizers and/or manually operated axle locks, Test 4 will be conducted with stabilizers and axle locks disengaged.

(*5*) For rough terrain forklift trucks equipped with lateral leveling, Test 4 should be conducted with the lifting mechanism initially perpendicular to the platform surface.

(*6*) For rough terrain forklift trucks up to and including 10,000 lb (4500 kg) rated capacity, equipped with a side shifter or a shifting mast:

(*a*) capable of shifting off center 4 in. (100 mm) or less in either direction, test on center;

(*b*) capable of shifting off center more than 4 in. (100 mm), test at extreme shift downgrade.

(*7*) For rough terrain forklift trucks over 10,000 lb (4500 kg) up to and including 30,000 lb (13 600 kg) rated capacity, equipped with a side shifter or shifting mast:

(*a*) capable of shifting off center 6 in. (150 mm) or less in either direction, test on center;

(*b*) capable of shifting off center more than 6 in. (150 mm) in either direction, test at extreme shift downgrade

8.6.8.11 Test 5 – Lateral Stability – Stacking – Unloaded. Procedure for this test is identical to that for Test 4 except that the position of the lifting mechanism is to be in the least stable combination of lift and reach.

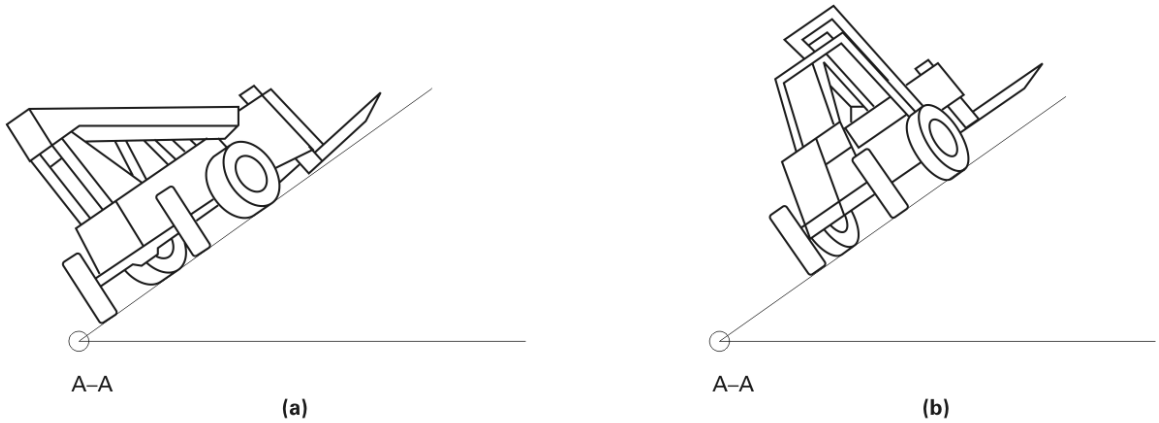

FIG. 6 LATERAL STABILITY – TRAVELING

8.7 Service Brake System Performance for Rough Terrain Forklift Trucks Up to and Including 70,000 lb (31 750 kg) Loaded Truck Weight

8.7.1 A service brake or hydrostatic drive system that meets the performance requirements of this paragraph shall be provided.

8.7.2 The service brake system performance shall be measured by one of two methods: the Drawbar Drag Method (see para. 8.7.5.1) or the Stopping Distance Method (see para. 8.7.5.2).

8.7.3 Brake Control Force Limits

8.7.3.1 The required brake performance shall be attained with not more than 157 lb (700 N) on a pedal or 68 lb (300 N) on a hand lever.

8.7.4 Test Conditions

8.7.4.1 Road surface shall be level clean asphalt, brushed concrete, or equivalent, and of adequate length to permit safe performance of the test. When using the stopping distance test procedure, the road shall also be of sufficient length to permit stabilized travel speed of the rough terrain forklift truck before application of the brakes.

8.7.4.2 The rough terrain forklift truck shall be loaded to the maximum permitted by the manufacturer. The power boost system, if supplied, shall be operating.

8.7.4.3 The burnishing of brakes prior to test is optional. The following is a suggested procedure:

(*a*) load – 50% of rough terrain forklift truck rated capacity;
(*b*) initial road speed: maximum or 15 mph (24 km/h), whichever is less;
(*c*) final road speed: zero (stop);
(*d*) deceleration rate: maximum without sliding tires or lifting steer tires;
(*e*) alternate: forward stop then reverse stop;
(*f*) rest: 30 min after each 50 stops. This is to be used as a guide; if smoke is evident, the rest time may be increased and the number of stops between rests decreased.

8.7.5 Test Methods

8.7.5.1 Drawbar Drag Method

(*a*) Measure drawbar drag in both forward and reverse direction while towing at no more than 1 mph (1.6 km/h) in both directions.
(*b*) The drawbar shall be horizontal and attached at the standard coupler height but not more than 36 in. (900 mm) above the road surface;
(*c*) Travel controls, including the transmission, shall be in neutral and all brake systems disengaged.
(*d*) The service brake system shall enable the rough terrain forklift truck to develop a drawbar drag at least equal to a percent of the loaded truck weight as follows:

$D = 3V$ (mph)
$D = 1.86V_1$ (km/h)

but not required to exceed 25% of loaded rough terrain forklift truck weight where
V = maximum travel speed, loaded, mph
V_1 = maximum travel speed, loaded, km/h
D = drawbar drag as a percent of loaded rough terrain forklift truck weight (e.g., 25 for 25%)

8.7.5.2 Stopping Distance Method. Determine that the brakes will stop the loaded rough terrain forklift truck within the required distance, measured from the point of brake application, calculated from the following formulas:

$$s = \frac{3.34V^2}{D} \quad \text{or} \quad s_1 = \frac{0.394\,V_1^{\,2}}{D}$$

where

s = approximate theoretical stopping distance, ft
V = maximum travel speed, loaded, mph
D = drawbar drag as a percent of loaded rough terrain forklift truck weight (25% maximum)
s_1 = approximate theoretical stopping distance, m
V_1 = maximum travel speed, loaded, km/h

8.7.6 Strength For rough terrain forklift trucks having a downward movement of brake pedal to apply the service brake(s), the system shall be capable of withstanding a brake pedal force of 300 lb (1335 N) without failure of any component.

8.7.7 System Recovery, Stored Energy Brake Systems. With the rough terrain forklift truck stationary, the service braking system shall have the capability of delivering at least:

(*a*) *Pneumatic Systems*. 70% of maximum system pressure measured at the brakes when the brakes are fully applied 20 times at a rate of six applications per minute with the engine at optimum rpm for recovery.

(*b*) *Hydraulic Systems*. 90% of maximum system pressure measured at the brakes when the brakes are fully applied 20 times at a rate of six applications per minute with the engine at its lowest rpm for recovery.

8.7.8 Warning Devices, Stored Energy Brake Systems. A service braking system using stored energy shall be equipped with a warning device which actuates before:

(*a*) *Pneumatic Systems*. System pressure drops below 50% of the manufacturer's specified maximum system pressure.

(*b*) *Hydraulic Systems*. Stored energy level drops below a pressure at which the system provides a minimum of six full pressure stops when applied at a rate of six applications per minute with the engine off.

The device shall be readily visible and/or audible to the operator, and provide a continuous warning. Gages indicating pressure or vacuum shall not be acceptable in meeting these requirements.

8.8 Parking Brake System Performance for Rough Terrain Forklift Trucks Up to and Including 70,000 lb (31 750 kg) Loaded Truck Weight

8.8.1 The parking brake system shall be capable of holding the rough terrain forklift truck stationary on a 15% dry swept-concrete grade under all conditions of loading in both forward and reverse directions. Brakes may be burnished prior to test.

8.8.2 The parking brake system may be part of or include the service brake system.

8.8.3 The parking brake system when applied shall maintain the required grade holding capability despite any contraction of the brake parts, exhaustion of the source of energy, or leakage of any kind.

8.8.4 The required parking brake performance shall be attained with not more than 157 lb (700 N) on a pedal or 69 lb (300 N) on a hand level.

8.9 Emergency Stopping System

8.9.1 The emergency stopping system shall provide that any single failure (other than a common friction means such as brake shoes and drums) in the service brake system shall not leave the machine without braking capability to comply with the following requirements.

(*a*) The emergency stopping system shall be capable of developing 35% of the service brake performance requirement with no more than 157 lb (700 N) pedal effort or 68 lb (300 N) hand lever effort. The emergency stopping system shall be capable of application by a person in the operating position and be arranged so that it cannot be released from the operating position after any application unless immediate reapplication can be made. The emergency stopping system may be applied automatically by malfunction of the service brake system. If an

automatic emergency stopping system is used, the automatic application shall occur after the warning device is activated. A parking brake system meeting these requirements is acceptable.

8.10 Load Handling Controls

8.10.1 Load Handling Controls

(*a*) Should preferably be located for right-hand operation;

(*b*) shall be self-centering;

(*c*) shall be clearly and durably identified on the control or in close proximity to indicate function(s) and direction of motion of load or equipment.

8.10.2 A single lever may be used to perform more than one function.

8.10.3 The upper surface of a rotary control device should move in the same sense of direction as a lever.

8.10.4 Special controls (such as for preselective or automatic devices) should preferably be identified and preferably be in accordance with the above recommendations

16 **8.10.5** For load handling symbols, see ISO 3287 and ISO 7000.

8.10.6 Lever- or handle-type controls (including toggle switches) should preferably be arranged in sequence of location and direction of motion according to Table 2.

8.10.7 Where the operation of lifting, lowering, tilting, and/or auxiliary device is controlled by a pair of push buttons, they shall operate in the same sense as described in para. 8.10.6. For example, actuation of the button that is located to the rear (relative to the operator's position) should serve the same function as motion of a control lever to the rear.

8.11 Travel Controls

8.11.1 Travel controls shall be clearly and durably identified on the control or in close proximity to indicate function(s) and direction of motion of load or equipment.

8.11.2 Travel controls shall be so arranged that power will be applied to the wheels only when the transmission or direction control has been actuated. A positive neutral position or control should be provided.

8.11.3 Engine speed shall be no greater than low idle unless the acceleration control has been intentionally actuated.

8.11.4 A manually operated engine shutoff device (may be key-type) shall be provided.

8.11.5 Service brakes, if foot operated, shall be applied by forward and/or downward motion of a pedal located to allow right-foot operation.

8.11.6 When separate brake pedals are provided for the independent right and left brake control, it shall be possible to obtain combined and/or equalized control.

8.11.7 The parking brake or parking brake device control shall be located convenient to the operator.

8.11.8 When a hand operated clutch control is provided, it shall be moved toward the operator (generally rearward) for disengagement.

8.11.9 Clutch pedal, if used, shall disengage the clutch by forward and/or downward motion, and shall be located for left-foot operation.

8.11.10 When a combination clutch and service brake pedal is used, the initial forward and/or downward movement shall disengage the clutch and the final forward and/or downward movement shall apply the service brakes.

8.11.11 Accelerator, if foot operated, shall increase speed by downward motion of a pedal located for right-foot operation.

8.11.12 When the direction of an engine speed hand control is in a plane parallel to the longitudinal axis of the rough terrain forklift truck, the direction of motion shall be generally forward or upward to increase engine speed.

8.11.13 When a combination pedal controls both acceleration and service brakes, forward and/or downward motion of the brake portion shall apply the service brakes. The combination pedal shall be located for right-foot operation.

8.11.14 The engine starting mechanism shall not be operable if the operation will produce rotation of the drive wheels.

TABLE 2
LOAD HANDLING CONTROLS

		Direction of Motion	
		Of Load or Equipment	**Predominant Motion of the Operator's Hand**
Functions	Reach	Retract Extend	Rearward or to Left Forward or to Right
	Lift	Up Down	Rearward Forward
	Tilt (Mast/Fork)	Rearward Forward	Rearward or to Left Forward or to Right
	Frame Level	Clockwise Counterclockwise	Right Left
	Stabilizer	Raise Lower	Rearward or Up Forward or Down
	Side Shift	Right Left	Rearward or to Right Forward or to Left
Auxiliary Functions	Push-Pull	Rearward Forward	Rearward Forward
	Rotate Laterally	Clockwise Counterclockwise	Rearward, Up, or to Right Forward, Down, or to Left
	Rotate Longitudinally	Rearward Forward	Rearward or Up Forward or Down
	Load Stabilizer	Down Up	Rearward or Up Forward or Down
	Swing	Right Left	Rearward, Up, or to Right Forward, Down, or to Left
	Slope	Clockwise Counterclockwise	Rearward, Up, or to Right Forward, Down, or to Left
	Fork Position	Together Apart	Rearward or Up Forward or Down
	Trip	Engage Release	Rearward or Up Forward or Down
	Grip	Engage Release	Rearward or Up Forward or Down
	Clamp	Clamp Release	Rearward or Up Forward or Down

8.11.15 When a hand operated forward-reverse directional control lever (nonvariable speed) is provided, it shall be moved forward for forward vehicle motion, and be moved rearward for rearward vehicle motion. If a neutral position is provided, provisions shall be made to locate and maintain the control in its neutral position.

8.11.16 When a hand operated variable-speed control is provided, it shall be moved generally forward or upward to increase speed.

8.11.17 When a hand operated combination direction and variable-speed ratio control lever is provided, it shall be moved forward or away from the operator from the neutral position for forward travel and increasing forward speed. It shall be moved generally rearward or toward the operator from the neutral position for rearward travel and increasing rearward speed. Provision shall be made for secondary motion when passing through neutral. A positive neutral position shall be provided.

8.11.18 When foot operated directional and variable-speed control(s) is provided, forward and/or downward motion on the outer or rear element of the control(s) should produce reverse direction, and forward and/or downward motion on the inner or forward element of the control(s) should produce forward direction. Forward and/or downward motion of either element shall increase speed. All direction and variable-speed control(s) shall be clearly and permanently identified to indicate their function. A positive neutral position or control shall be provided.

8.12 Steering Controls

8.12.1 Rough terrain forklift trucks employing a steering wheel with the operator facing the load shall steer as follows. Clockwise rotation of the handwheel shall steer the truck to the operator's right.

8.12.2 Skid steer trucks employing dual lever steering controls shall steer as follows. Rearward or upward motion of the right-hand control and/or forward or downward motion of the left-hand control shall turn the truck clockwise.

8.12.3 All steering controls shall be confined within the plan view outline of the rough terrain forklift truck.

8.12.4 Where steering can be accomplished with either hand and the steering mechanism is of a type (power steering or equivalent) that prevents road reactions from causing the handwheel to spin, steering knobs may be used. When used, steering knobs shall be of a type that can be engaged by the operator's hand from the top and shall be within the periphery of the steering handwheel.

8.13 Tilt Mechanism

To maintain stability with lifting mechanism elevated, titling should be controllable, smooth, and at reasonable speed.

8.14 Forks

8.14.1 Forks shall be designed to avoid unintentional unhooking and/or excessive lateral movement.

8.14.2 Each fork shall be clearly stamped with its individual load rating in an area readily visible and not subject to wear; for example, 1500 x 24, meaning 1500 lb load rating at 24 in. load center, or 2000 x 600, meaning 2000 kg load rating at 600 mm load center.

8.14.3 Fork strength shall permit the following loading and method of test.

(*a*) The test load *F* shall correspond to three times the load rating of the fork arm and shall be applied to it at the applicable distance *D* from the front face of the fork arm shank. See Fig. 7.

(*b*) The fork arm shall be restrained in a manner identical to that used on the rough terrain forklift truck.

(*c*) The test load shall be applied twice, gradually and without shock, and maintained for 30 sec each time.

(*d*) The fork arm shall be checked before and after the second application of the test load. It shall not show any permanent deformation.

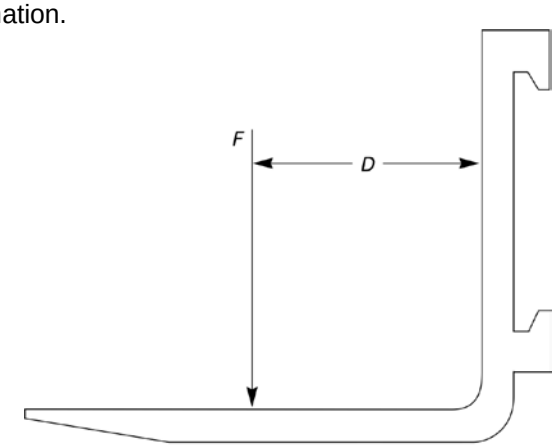

FIG. 7 TYPICAL FORK

8.14.4 These tests are intended to be applied to prototype forks but may also be applied to production forks on a selective basis, as required by the user or manufacturer.

8.15 Protective Structures

16 Rough terrain forklift trucks fitted with a side mounted operator's compartment shall be equipped with rollover protective structures (ROPS) that comply with the requirements of ISO 3471:2008 as applicable to wheel loaders.

8.16 Overhead Guards

8.16.1 Rough terrain forklift trucks shall be fitted with an overhead guard.

8.16.2 Design Requirements

(*a*) The overhead guard and its mounting shall be capable of withstanding the impact of a 100 lb (45 kg) hardwood covered cube (or equivalent) under the conditions specified in para. 8.16.3(b).

(*b*) The overhead guard and its mounting shall be capable of withstanding an impact test as specified in Table 3. Details of conducting the test and measuring the deformation are covered in para. 8.16.3(c).

(*c*) Openings in the top of the overhead guard shall not exceed 6 in. (150 mm) in one of the two dimensions, width or length.

(*d*) The overhead guard shall be large enough to extend over the operator in his normal operating position during rough terrain forklift truck operation. It shall not extend beyond the plan view outline of the truck.

(*e*) For sit-down rider rough terrain forklift trucks, a vertical clearance of at least 39 in. (990 mm) should be maintained from the point of maximum depression of the seat under the operator to the underside of the section of the guard under which the operator's head is located in his normal position during truck operation.

(*f*) When requested by the user, the manufacturer may reduce the normal overhead guard height and the vertical clearance for the operator's head under the guard to permit rough terrain forklift truck operation by the user with a guard in areas where overhead obstructions limit the overall lowered height of the truck.

TABLE 3
OVERHEAD GUARD IMPACT
TEST LOAD

16

Rough Terrain Forklift Truck Rated Capacity at a at a 600 mm Load Center	Impact Test Load x Drop Distance, Joules (J)	Minimum Weight of Test Load, kg
1 360 kg and under	5 400	340
1 361 kg to 2 270 kg	10 800	680
2 271 kg to 3 630 kg	21 760	1 360
3 631 kg to 6 350 kg	32 640	1 360
6 351 kg to 11 300 kg	43 520	1 360
11 301 kg and over	48 960	1 360
at a 24 in. Load Center	**ft-lb[1]**	**lb**
3,000 lb and under	4,000	750
3,001 lb to 5,000 lb	8,000	1,500
5,001 lb to 8,000 lb	16,000	3,000
8,001 lb to 14,000 lb	24,000	3,000
14,001 lb to 25,000 lb	32,000	3,000
25,001 lb and over	36,000	3,000

NOTE:
(1) Ratings reflect industry practice, not direct conversions.

Details of conducting the test and measuring the deformation are covered in para. 8.16.3 (c)

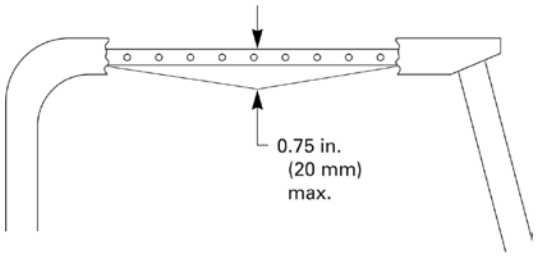

FIG. 8 OVERHEAD GUARD CUBE DROP DEFORMATION LIMIT

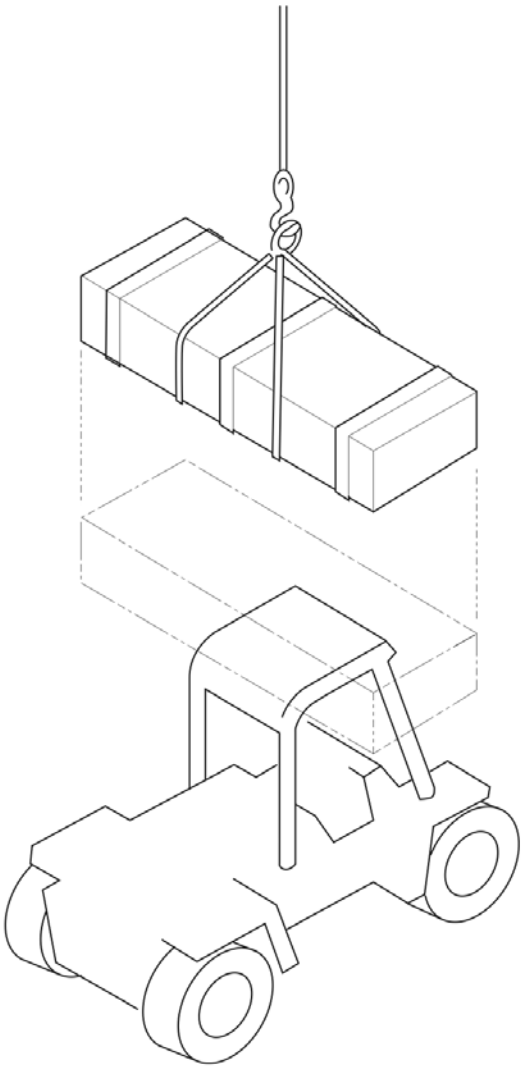

FIG. 9 OVERHEAD GUARD IMPACT TEST METHOD

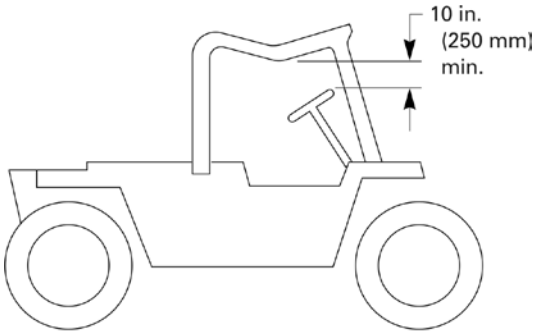

FIG. 10 OVERHEAD GUARD IMPACT DEFORMATION LIMIT

8.16.3 Test Procedures

(a) General

(*1*) Test shall be conducted with the overhead guard in place on a rough terrain forklift truck for which it is designed, or a simulated mounting may be used.

(*2*) If the 100 lb (45 kg) hardwood covered cube (or equivalent) drop test is conducted first, the same overhead guard and mounting can be used to conduct the impact drop test.

(*b*) *Cube Drop Test – 100 lb (45 kg)*

(*1*) The 100 lb (45 kg) test cube shall be covered with hardwood (or equivalent) and measure approximately 1 ft (300 mm) on a side.

(*2*) The test cube shall be dropped in free-fall vertically at random on the overhead guard, and the center of the cube shall strike within a 24 in. (600 mm) diameter circle centered above the operator's seat.

(*3*) The test cube shall be positioned to drop in free-fall with a flat surface approximately parallel to the top of the overhead guard, and not strike on a corner or edge of the cube.

(*4*) The test cube shall be dropped as described, a distance of 5 ft (1500 mm) ten times, without fracture (no parts separation; however, evidence of minor cracks is permissible) and without permanent deformation exceeding 0.75 in. (18 mm) based on the original head clearance provided by the guard (see Fig. 8).

(*c*) *Impact Drop Test*

(*1*) The test load shall be composed of 2 x 4 normal construction grade lumber 12 ft (3.6 m) long and not to exceed 40 in. (1000 mm) in width. The 2 x 4s should be placed with the 4 in. (100 mm) nominal dimension of the cross section horizontal. The lumber shall be bound together with at least three metal bands, one approximately in the center, and the others not further than 3 ft (0.9 m) from each end (see Fig. 9). A test load of different dimensions and/or materials may be used, provided it results in a test not less severe than that described.

(*2*) The test load shall be dropped in free-fall from an approximate horizontal position and from a height to develop the required impact in ft-lb (J), specified in Table 3.

(*3*) The test load shall be centered above the overhead guard with the 12 ft (3600 mm) length at right angles to the longitudinal centerline of the rough terrain forklift truck, the 40 in. (1000 mm) dimension flat, and shall strike the guard in this position (see Fig. 9).

(*4*) The permanent deformation of the overhead guard and its mounting after impact shall be measured between a horizontal plane tangent to the underside of the guard at the operator's position and a horizontal plane tangent to the upper surface of the steering wheel. There shall be not less than 10 in. (250 mm) between the planes (see Fig. 10).

8.17 Load Backrest Extension

Load backrest extension, if provided, should have height, width, and size of openings not to exceed 6 in. (150 mm) in one of the two dimensions, to minimize the possibility of the load falling toward the operator.

8.18 Guards for Wheels

Guards or other means shall be provided to protect the operator, in the normal operating position, from particles thrown by the tires or wheels.

8.19 Guards for Moving Parts

The operator, in the normal operating position, shall be protected from moving parts that represent a hazard.

8.20 Overtravel Limits

Provision shall be made to prevent travel of mechanical systems such as hoists, tilt, etc., beyond that intended by design.

8.21 Warning Device

8.21.1 Every rough terrain forklift truck shall be equipped with an operator controlled horn, whistle, gong, or other sound-producing device(s).

8.21.2 In addition, other devices (visible or audible) suitable for the intended area of use may be installed when requested by the user.

8.22 Pedal and Platform Surface

Control pedals and control platforms stood on or engaged by the operator's feet shall have slip resistant surfaces.

8.23 Emergency Lowering of Load

8.23.1 Vertical masts shall be provided with a means to prevent the load from lowering at a rate in excess of 120 ft/min (0.6 m/s) in case of a failure in the load supporting hydraulic control circuits.

8.23.2 Variable reach rough terrain forklift trucks shall be provided with means to prevent the load mechanism from moving in case of a failure in the load support hydraulic lines.

16 **8.24 Personnel Work Platforms for Elevating Personnel**

8.24.1 These design requirements pertain only to rough terrain forklift trucks with personnel work platforms where the personnel work platform is not equipped with controls affecting the travel of the rough terrain forklift truck.

8.24.2 If the rough terrain forklift truck manufacturer approves the use of personnel work platforms with a rough terrain forklift truck, the rough terrain forklift truck manufacturer shall indicate, (e.g. in the operator's manual, on the load capacity chart, on the rough terrain forklift truck information plate(s), the personnel work platform(s) approved for use and shall provide load capacity chart(s) for the specific personnel work platform(s) approved for use.

8.24.3 The design requirements for personnel work platforms used for lifting personnel shall include the following:

(a) A structural safety factor for the personnel work platform of not less than 2:1 for ductile materials (based on minimum yield strength) and 5:1 for non-ductile materials (based on minimum ultimate strength) used for all load supporting structural elements and personnel work platform attachment means.

(b) The personnel work platform shall have a floor with a slip resistant and self-draining surface. Any opening in the floor or between the floor and the toe board shall be dimensioned so as to prevent the passage of a 15 mm diameter sphere. Trap doors in the floor of the personnel work platform are not permitted.

(c) If the distance from ground level to the floor of the personnel work platform exceeds 400 mm, the personnel work platform shall be equipped with an access ladder. This distance shall be determined when the rough terrain forklift truck is on a level surface, and the personnel work platform is in the fully lowered position on the lifting means. The steps or rungs of the ladder, and the handholds or handrails of the ladder shall conform to the requirements of ISO 2867. The ladder shall align with the access opening to the personnel work platform.

(d) The personnel work platform shall not allow any portion of the fork tips with which the personnel work platform is intended to be used to protrude beyond any part of the personnel work platform.

(e) The minimum space required for each person allowed on the personnel work platform as stated on the personnel work platform nameplate shall not be less than 500 mm x 500 mm.

(f) Personnel work platforms may utilize movable sections to extend the length of the platform perpendicular to the longitudinal center plane of the truck. Personnel work platforms with movable sections may have a different capacity for the platform when the movable sections are in the retracted

and extended positions. Both capacities shall be clearly indicated on the personnel work platform nameplate. The rough terrain forklift truck information plate(s) or load capacity chart shall indicate the rated capacities for the personnel work platform with the movable sections in both extended and retracted

(g) A toe board with a minimum height from the platform floor of 150 mm shall be provided around the perimeter of the personnel work platform. At points of access to the personnel work platform the height of the toe boards may be reduced to 100 mm. Toe boards may be attached to gates and removable guardrails.

(h) Means shall be provided to prevent a side tilt attachment from tilting laterally when the personnel work platform is installed. Personnel work platforms, whether fitted to the forks or a quick interchange device, shall not be equipped with a side tilt device.

(i) Means shall be provided to:

(1) securely retain the personnel work platform against the vertical face of the forks or carriage (fork mounted), or

(2) securely attach the personnel work platform to the lifting mechanism (quick interchange mounted).

(j) The personnel work platform shall be provided with restraining means for personnel on the personnel work platform. Personnel work platforms equipped with movable sections shall meet the same restraining requirements. The restraining means shall consist of either a guardrail enclosing the entire perimeter of the personnel work platform, or a guardrail enclosing all but the side of the personnel work platform that faces the intended work area. A permanent guardrail or similar structure shall be provided on the side closest to the lifting mechanism. The lanyard anchorage points shall only be provided on the permanent part of the personnel work platform structure.

(k) Protection shall be provided from moving parts of the rough terrain forklift truck that present a hazard to personnel on the personnel work platform.

(l) All guardrails shall have a height from the personnel work platform floor of 1075 mm ± 75 mm around its upper periphery. Midrails shall also be provided and shall be located not further than 550 mm from the guardrails and the toe board.

(m) Gates which are hinged on the side shall open inward shall have a positive latch, even if they automatically return to the closed position.

(n) Chains or ropes shall not be used for guardrails or access openings on the personnel work platform.

(o) Each guardrail and midrail shall withstand a concentrated test load of 1000 N applied at any point in any direction without visible permanent deformation.

(p) Anchorage(s) for the connection of a lanyard(s) shall be provided on the personnel work platform. Anchorages shall be capable of withstanding the force of 3600 lbs (16 kN) for each person allowed by the rough terrain forklift truck manufacturer on the anchorage point without reaching ultimate strength. The strength requirement shall only apply to the anchorage(s) and their attachment to the personnel work platform. The number of anchorages shall equal or exceed the rated number of occupants as specified on the personnel work platform nameplate. More than one occupant may attach to a single anchorage if the anchorage is rated for more than one person.

Anchorages shall be designed to accept the lanyard. Exposed edges or corners shall be relieved either with a radius of at least 0.5 mm or a 45° chamfer.

(q) The personnel work platform manufacturer shall identify and mark each lanyard anchorage. The identification shall specify the maximum number of lanyards that can be attached at each location.

(r) The personnel work platform manufacturer shall provide on the personnel work platform a weather-resistant compartment for storing manufacturer's manuals/instructions related to the personnel work platform.

8.24.4 In addition to the design requirements of 8.24.3, specific design requirements for personnel work platforms equipped with controls for positioning the personnel work platform, but without controls for the travel of the rough terrain forklift truck, shall include the following:

(a) Information plate(s) or load capacity chart(s) shall be provided on the personnel work platform and clearly visible to the personnel work platform operator in the normal operating position.

(b) Provisions for the personnel work platform operator to monitor the boom angle and boom extension from the control position, if necessary, to control placement of the personnel work platform within the load chart.

(c) Controls shall be positioned and/or protected against inadvertent operation. Foot controls shall have a slip resistant surface.

(d) Controls shall be positioned so that they are readily accessible to the personnel work platform operator, and so that they do not interfere with access openings.

(e) All control devices shall be protected against activation other than that initiated by the operator. A separate control which has to be continuously activated by the operator in order for any motion to take place meets this requirement.

(f) The motions of each control shall be consistent with the motions of the personnel work platform that are carried out by the control being operated. Controls for the positioning of the personnel work platform, when released, shall return to the neutral position.

(g) Control valves for operating personnel work platform functions shall be designed so that the corresponding movements stop in the event of power failure.

(h) Means shall be provided to render inoperative all rough terrain forklift truck operating controls, other than those on the personnel work platform, when the controls on the personnel work platform have been selected for use. Such means shall be provided at the operator position on the rough terrain forklift truck, and shall be capable of returning operating control to the operator position on the rough terrain forklift truck. If the rough terrain forklift truck is equipped with an alternate control position at the ground level, such means may also allow selection of control to the alternate control position. If multiple control positions are provided on the personnel work platform, only one control position shall be capable of being operated at one time. The emergency stop controls shall be operable from any position on the platform, from the operator position on the truck and, if so equipped, from the alternate control position at the ground level regardless of which controls are selected for use.

(i) All control positions on the personnel work platform shall be provided with an emergency stop control that stops the control functions of the personnel work platform. When actuated, the emergency stop control shall prevent the control functions from operating until it is reset. Means shall be provided to override the emergency stop control in the personnel work platform from the ground to facilitate lowering the personnel work platform from the ground operator position.

(j) At least one control position on the personnel work platform shall provide controls to start and stop the engine of the rough terrain forklift truck.

(k) An emergency lowering means shall be provided to lower the personnel work platform to ground level in the event of power failure. As a minimum, the controls for such means shall be available at ground level, and shall be identified.

8.24.5 The following information shall be provided by the manufacturer of the personnel work platform, and shall be legibly and permanently marked on the personnel work platform.

(a) Name and address (city, state and country are mandatory) of the manufacturer of the personnel work platform.

(b) Model number.

(c) Serial number.

(d) Maximum weight of the personnel work platform. If the personnel work platform is equipped with removable guardrails, the maximum weight shall include all removable guardrails and attaching components.

(e) For fork mounted carriages, the maximum and minimum length of the forks that the personnel work platform is intended to be used with.

(f) The maximum number of occupants allowed on the personnel work platform.

(g) The maximum capacity of the personnel work platform including occupants, equipment and materials.

(h) The maximum hydraulic operating pressure recommended by the personnel work platform manufacturer (on personnel work platforms equipped with hydraulic side swing or side shift).

(i) The following statement (or equivalent): Capacity of the rough terrain forklift truck and personnel work platform combination may be less than the capacity shown on the personnel work platform. Refer to the load capacity chart for the rough terrain forklift truck and personnel work platform combination used.

(i) Designation of compliance with the requirements of this Standard, applicable to the manufacturer.

8.24.6 Specific Stability Requirements for Personnel Work Platforms

8.24.6.1 Tilting Platform Test. Rough terrain forklift trucks with personnel work platforms shall meet the design stability requirements in para. 8.6 of this standard with exceptions as follows.

(a) The personnel work platform shall be level (with no rearward tilt) when on a level surface for all tests.

(b) The test load shall be positioned in the least stable condition on the personnel work platform, with its center of gravity placed 300 mm from the inside surface of the guardrail, or 300 mm from the outer edge of the personnel work platform in areas where the guardrail may be removed. For personnel work platforms with floor dimensions less than 600 mm, the center line of floor dimension shall be used.

(c) If the personnel work platform is equipped with movable sections, and the rated capacity of the platform differs when the movable sections are retracted or extended, the platform shall be tested in the following configurations:

(1) With the movable sections retracted, the test load equal to the rated capacity of the platform shall be placed in accordance with para. (b) above.

(2) With the movable sections positioned in the least stable condition, the test load equal to the rated capacity for platform in this configuration shall be placed in the most adverse location on the movable section of the platform in accordance with para. (b) above.

(d) Suspended test loads shall not be used for these tests.

(e) Side tilt attachments must be prevented from tilting laterally.

(f) Fork mounted personnel work platforms shall be secured to the forks with the forks in the least stable condition (i.e., if the forks can be offset from the machine center line, the forks shall be fully offset in the least stable condition).

(g) Personnel work platforms that allow for side swing, side shift or other types of motion must place the personnel work platform and the test load in the least stable condition.

8.24.6.2 Stability with Manual Forces. In addition to the tests performed in para. 8.24.7.1, the following test shall be performed. Using the procedure outlined for this test, a rough terrain forklift truck with a personnel work platform shall sustain the force of a manual load on the personnel work platform and shall not overturn when tilted on the tilting platform.

(a) Test Procedure for Stability with Manual Forces. A combination of horizontal forces and loads shall be applied to the personnel work platform such that the least stable configuration is attained. The rough terrain forklift truck manufacturer shall determine the least stable configuration and position the rough terrain forklift truck on a tilting platform that is initially level as follows:

(1) If the manufacturer determines that the least stable combination is longitudinal, the rough terrain forklift truck shall be positioned on the tilting platform per para.8.6.8.7 (a).

(2) If the manufacturer determines that the least stable combination is lateral, the rough terrain forklift truck shall be positioned on the tilting platform per para. 8.6.8.9 (a).

(b) For rough terrain forklift trucks equipped with masts only, the test is to be conducted at maximum fork height.

(c) For variable reach rough terrain forklift trucks, test is to be conducted at the least stable combination of lift and reach for all load zones (see Figs. 1 and 2).

(d) For rough terrain forklift trucks equipped with tilt control, the personnel work platform is to be level (with no rearward tilt) when the tilting platform is level.

(e) For rough terrain forklift trucks equipped with manually operated stabilizers or manually operated axle locks, this test shall be conducted both with the stabilizers and axle locks engaged and disengaged.

(f) The rough terrain forklift truck shall be laterally level on the tilting platform prior to tilting the tilting platform. Compensation for inclines with lateral leveling capability is not permitted for this test.

(g) The tilting platform shall be tipped 9%. The rough terrain forklift truck position on the tilting platform shall be maintained by brakes or similar means that do not affect the stability.

(h) Apply a combination of horizontal forces and loads as determined for the least stable configuration:

(1) Apply a horizontal force to the upper perimeter of the personnel work platform in the least stable direction. The force shall be 650 N for personnel work platforms rated for one person, and 1300 N for personnel work platforms rated for two or more persons.

(2) If the manufacturer determines that the least stable configuration requires a load on the personnel work platform, apply the appropriate load per para. 8.24.7.1.

(3) If the personnel work platform allows the use of side shift, side swing or other types of motion, the manufacturer shall position the personnel work platform in the least stable condition.

Note that the least stable configuration may require this force to be applied longitudinally or laterally, and with or without load on the personnel work platform.

8.24.6.3 Stability When Arresting a Fall. In addition to the tests performed in para. 8.24.7.1, the following test shall be performed. Using the procedure outlined for this test, a rough terrain forklift truck with a personnel work platform shall sustain the force of a 136 kg person in an arrested fall of 1.85 m and shall not overturn when tilted on the tilting platform.

(a) Test Procedure for Stability When Arresting a Fall. A combination of horizontal forces and loads shall be applied to the personnel work platform such that the least stable configuration is attained. The rough terrain forklift truck manufacturer shall determine the least stable configuration and position the rough terrain forklift truck on an initially level platform as follows:

(1) If the manufacturer determines that the least stable combination is longitudinal, the rough terrain forklift shall be positioned on the tilting platform per para. 8.6.8.7 (a).

(2) If the manufacturer determines that the least stable combination is lateral, the rough terrain forklift shall be positioned on the tilting platform per para. 8.6.8.9 (a).

(b) For rough terrain forklift trucks equipped with masts only, the test is to be conducted at maximum fork height.

(c) For variable reach rough terrain forklift trucks, the test is to be conducted at the least stable combination of lift and reach for all load zones (see Figs. 1 and 2).

(d) For rough terrain forklift trucks equipped with tilt control, the personnel work platform is to be level (with no rearward tilt) when the tilting platform is level.

(e) For rough terrain forklift trucks equipped with manually operated stabilizers or manually operated axle locks, this test shall be conducted both with the stabilizers and axle locks engaged and disengaged.

(f) The rough terrain forklift truck shall be laterally level on the tilting platform prior to tilting the tilting platform. Compensation for inclines with lateral leveling capability (sway control) is not permitted for this test.

(g) The personnel work platform shall be level (with no rearward tilt) when on a level surface for all tests.

(h) Apply loads as determined for the least stable configuration:

(1) If the manufacturer determines that the least stable configuration requires a load on the personnel work platform, apply the appropriate load per para. 8.24.7.1.

(2) If the personnel work platform allows the use of side shift, side swing or other types of motion, the manufacturer shall position the personnel work platform in the least stable condition.

(i) The tilting platform shall be tipped 9%. The rough terrain forklift truck position on the tilting platform shall be maintained by brakes or other similar means that do not affect the stability.

(j) The forklift truck with the personnel work platform while so positioned shall sustain the force of a 136 kg test mass free falling as follows:

(1) The test mass origin shall be placed with the centre of gravity 0.46 m outside of the top rail of the personnel work platform in a direction that creates the most adverse stability condition and;

(2) The test mass shall be attached by a non-shock absorbing lanyard to a lanyard anchorage point nearest the test mass origin. The lanyard shall be routed over the top rail of the personnel work platform such that the overturning force is applied to the top rail and;

(3) The test mass shall free fall a minimum vertical distance of 1.85 m without interference, obstruction, or hitting the floor/ground, during the test.

(k) The rough terrain forklift truck with the personnel work platform shall not overturn as a result of this test. Permanent deformation of any part of the personnel work platform is acceptable, provided that the test mass is not released during the test.

8.25 Seat Belts

Seat belts shall be provided that meet or exceed the requirements of SAE J386.

8.26 Passenger Compartment

8.26.1 If a passenger compartment is provided, the compartment shall provide equivalent protection as provided for the operator and shall comply with paras. 8.16, 8.17, 8.18, 8.19, 8.20, 8.23, and 8.26 of this Standard.

(*a*) If the passenger compartment is separate from the operator's compartment, there shall be no controls for the operation of any of the rough terrain forklift truck's functions in the passenger's compartment.

(*b*) If the passenger compartment is not separate from the operator's compartment, sufficient space shall be provided for the passenger to allow the operator to operate the rough terrain forklift truck's controls without interference with the passenger.

8.26.2 A permanent label shall be placed in clear view of the seated passenger using text and/or pictorials to provide the following information.

The passenger shall:

(*a*) remain seated at all times except when entering and exiting;

(*b*) fasten the seat belt;

(*c*) keep all parts of the body, including hands and feet, inside the passenger compartment;

(*d*) keep clear of, and make no contact with, the operating controls of the rough terrain forklift truck.

16

Part IV
GLOSSARY OF COMMONLY USED WORDS AND PHRASES

approved: the classification or listing as to fire, explosion, and/or electric shock hazard by a nationally recognized testing laboratory, i.e., a laboratory qualified and equipped to conduct examinations and tests such as those prescribed by Underwriters Laboratories, Inc.

attachment: a device other than conventional forks or load backrest extension, mounted permanently or removably on the elevating mechanism of a truck for handling the load. Popular types are fork extensions, clamps, rotating devices, side shifters, load stabilizers, rams and booms.

attachment, removable: an attachment that can be mounted on the forks, or in place of the forks or the carriage, by means of such conventional fasteners as bolts, pins, etc., and that does not require the disassembly of any other portion of the lifting system to install or remove.

axle lock: means to lock out vertical axle oscillation to improve lateral stability.

belt, body: see *body belt*.

body belt: a simple or compound strap with means for securing it about the waist and for securing a lanyard to it.

boom: the pivoting support member providing the guideways that permits horizontal and/or vertical movement of the load engaging means.

boom angle: reference angle of boom to the horizontal (horizontal being equal to 0 deg).

boom extension reference points: a method of indicating boom extension used in combination with boom angle to identify lifting capacity from the capacity chart.

brake system, parking: a means to prevent inadvertent movement of a stationary truck.

brake system, service: the primary means of any type used for stopping and holding the truck.

bridge plate: a portable device for spanning the gap between two rail cars.

capacity: the capacity of a truck equipped with load carriage and forks, or with attachments, is the weight at a specified load center that a given truck can transport in a carry position and stack to the specified elevation of the load-engaging means.

NOTE: Capacity is used to designate the weight handling ability of a particular rough terrain forklift truck as equipped.

carriage: a support structure for forks or attachments.

center of gravity (*of load*): that point at which the load mass is concentrated. It is located horizontally by its distance from the vertical fork face and vertically by its distance above the load bearing surface of the forks, or equivalents for other load-engaging means. Except where otherwise indicated, this point is located in the vertical plane of the truck's longitudinal center line.

creep: slowest steady state of movement.

deceleration device: any mechanism that serves to reduce the falling speed and provide a complete stop in falling without interference and manipulation of the device.

dockboard: a portable or fixed device for spanning the gap or compensating for difference in level between loading platforms and carriers.

fork height: the vertical distance from the floor to the horizontal load carrying surface of the forks, measured adjacent to the heel of the forks.

forklift truck: see *truck, forklift*.

forks: horizontal tine-like projections, normally suspended from the carriage, for engaging and supporting loads.

forward reach: horizontal distance measured from the forward most point of the front tires to the load center located on the top surface of the forks.

free lift: the attainable lift from the extreme lowered position of the carriage before the stated overall lowered height of the mast is exceeded by any standard part of the forks, mast, or carriage assemblies.

lanyard: a rope suitable for supporting one person. One end is fastened to the body belt or harness and the other end is secured to a substantial object or a lifeline.

lateral leveling: changing the lateral relationship between the rough terrain forklift truck lifting mechanism and the ground; generally used to adjust the mast or boom to vertical when the truck is standing on a side slope.

leveling, lateral: see *lateral leveling*.

lifeline: a rope, suitable for supporting one person, to which a lanyard, deceleration device, or body belt (or harness) is attached.

lift truck: see *truck*, *forklift*.

load backrest: that portion of the carriage and forks serving to restrain the load when the load is tilted rearward or upward.

load backrest extension: a removable device that increases the load restraining area beyond that provided by the load backrest.

load center: the horizontal longitudinal distance from the intersection of the horizontal load carrying surfaces and vertical load-engaging faces of the forks (or equivalent load-positioning structure) to the center of gravity of the load.

maintenance platform: see *work platform*

mast: the support member providing the guideways permitting vertical movement of the carriage. It is usually constructed in the form of channels or similar sections providing the supporting pathway for the carriage rollers.

maximum fork height: the fork height attainable in fully raised position when loaded.

overhead guard: a framework fitted to a truck over the head of a riding operator for the purpose of providing protection for the operator from falling objects.

parking braking system: see *braking system, parking*.

platform, work: a platform intended to provide safe working conditions and designated to be mounted on a high-lift fork truck or other elevating device, providing an area for person(s) elevated by and working from the platform work surface.

powered industrial truck: see *truck, powered industrial*.

rated capacity: for a truck equipped with load carriage and forks or attachments is the weight established by the manufacturer at a required load center that a given truck can transport and stack to a height established by the manufacturer.

NOTE: Rated capacity is used as a means for comparing the weight handling ability of rough terrain forklift trucks.

16 *reach mechanism:* any cantilever structure, assembly or mechanical device that supports the forks or approved attachments of the rough terrain forklift truck

removable attachment: see *attachment, removable*.

rough terrain forklift truck: see *truck, rough terrain forklift*.

safety platform: see *platform, work*.

safety work surface: a surface intended to reduce the possibility of foot slippage.

service brake system: see *brake system, service*.

side loader: see *truck, side loader*.

side mounted operator compartment: an operator's compartment attached so that its longitudinal center line is outside of the rough terrain forklift truck main frame structure in the plan view.

stabilizers, retractable: extendible or pivoting mechanical supports used to improve stability of a stationary rough terrain forklift truck.

tiering: the process of placing one load on or above another.

truck: see *truck, rough terrain forklift*.

truck, forklift: a self-loading truck, equipped with load carriage and forks for transporting and tiering loads.

truck, powered industrial: a mobile, power propelled truck used to carry, push, pull, lift, stack, or tier material.

truck, rough terrain forklift: a wheeled-type truck designed primarily as a forklift truck, which may be equipped with attachments. This truck is intended for operation on unimproved natural terrain as well as the disturbed terrain of construction sites. See Section 2 and Figs. A1 through A6.

16 *truck, rough terrain, attended:* when the operator is less than 25 feet (7.6m) from the normal operating position, which remains in the operator's view.

16 *truck, rough terrain, unattended:* when the operator is 25 feet (7.6m) or more from the normal operating position, which remains in the operator's view, or whenever the operator leaves the rough terrain forklift truck and it is not in the operator's view

truck, side loader: a self-loading truck, generally high lift, having load-engaging means mounted in such a manner that it can be extended laterally under control to permit a load to be picked up and deposited in the extended position and transported in the retracted position.

truck, variable reach rough terrain forklift: a rough terrain forklift truck with the additional capability of extending and retracting the forks (and load) in a longitudinal direction. See Figs. A1 and A2.

user: a person or organization responsible for employing rough terrain forklift trucks.

variable reach rough terrain forklift truck: see *truck, variable reach rough terrain*.

work platform: see *platform, work*.

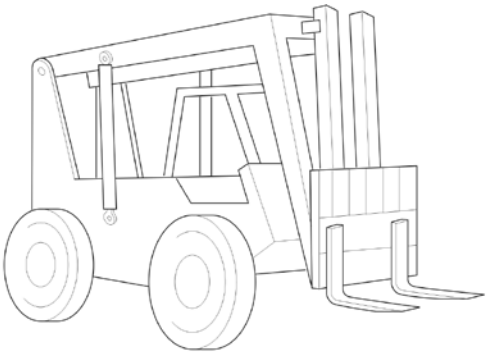

FIG. A1 VARIABLE REACH –
LINKAGE TYPE
(Four Wheel Steer, Two Wheel Steer, Four Wheel Drive, Two Wheel Drive)

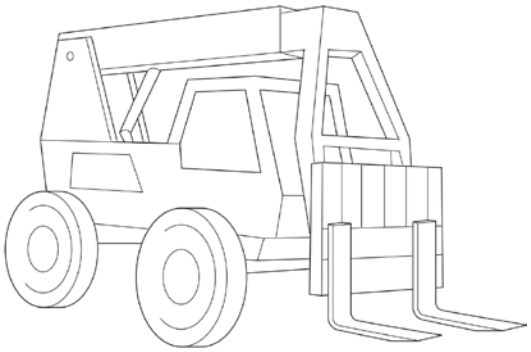

FIG. A2 VARIABLE REACH –
BOOM TYPE
(Four Wheel Steer, Two Wheel Steer, Four Wheel Drive, Two Wheel Drive)

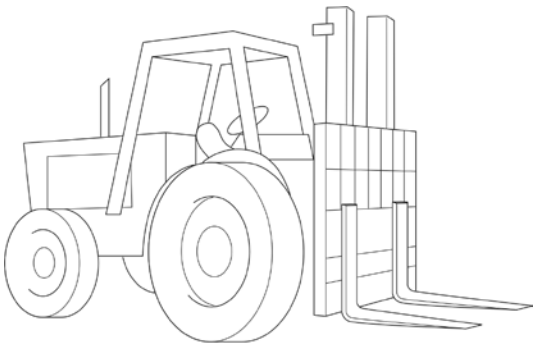

FIG. A3 VERTICAL MAST,
TWO WHEEL STEER, TWO WHEEL DRIVE, FOUR WHEEL DRIVE

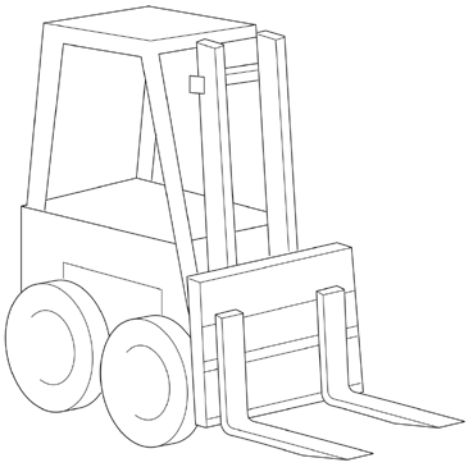

FIG. A4 VERTICAL MAST, SKID STEER

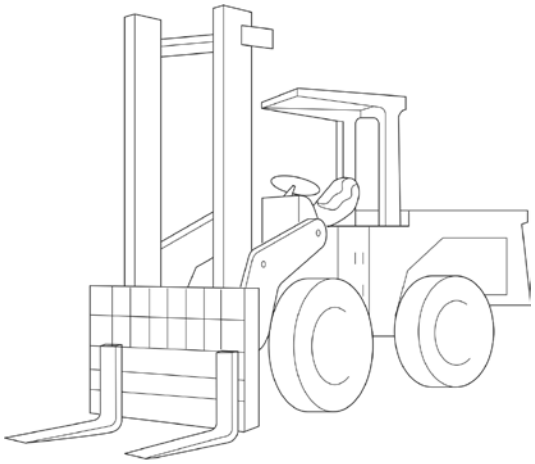

FIG. A5 VERTICAL MAST, ARTICULATED FRAME STEER, FOUR WHEEL DRIVE

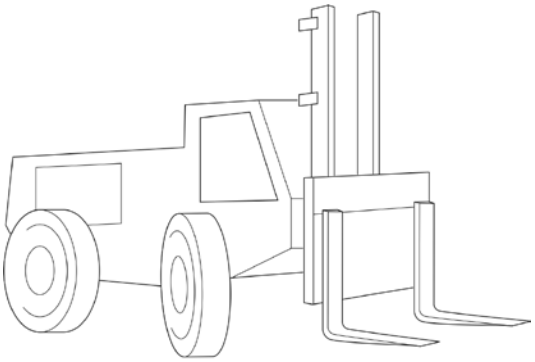

FIG. A6 VERTICAL MAST,
FOUR WHEEL STEER, TWO WHEEL DRIVE, FOUR WHEEL DRIVE

MANDATORY APPENDIX I
REFERENCES

The following are safety standards and codes (unless otherwise noted) referenced within this Standard. It is the intent of this Standard to refer to the standards and codes listed below in their latest edition when they are referenced within the Standard.

ANSI/NFPA 30-1996, Flammable and Combustible Liquids Code
ANSI/NFPA 58-1995, Storage and Handling of Liquefied Petroleum Gases
ANSI/NFPA 505-1996, Fire Safety Standard for Powered Industrial Trucks Including Type Designations, Areas of Use, Maintenance and Operation

Publisher: National Fire Protection Association (NFPA), 1 Batterymarch Park, Quincy, MA 02269

ANSI/UL 558-1991 Standard for Safety for Internal Combustion-Engine-Powered Industrial Trucks
ANSI/UL 583-1991 Standard for Safety for Electric-Battery-Powered Industrial Trucks

Publisher: Underwriters Laboratories (UL), 333 Pfingsten Road, Northbrook, IL 60062

ASME B56.11.3-1992 Load Handling Symbols for Powered Industrial Trucks (not a safety standard)
ASME B56.11.7- 1998 Liquid Propane Gas (LPG) Fuel Cylinders (Horizontal or Vertical) Mounting – Liquid Withdrawal – For Powered Industrial Trucks

Publisher: The American Society of Mechanical Engineers (ASME International), Three Park Avenue, New York, NY 10016-5990

ANSI Z53.1-1979, Color Code for Marking Physical Hazards
ANSI Z93.0-1989, Industrial Engineering Terminology (not a safety standard)
ANSI Z535.2-1991, Environmental and Facility Safety Signs
ANSI/IES RP7-1990, Practice for Industrial Lighting (not a safety standard)
ANSI/SAE J386-JUN 85, Operator Restraint Systems for Off-Road Work Machines
ISO 5353-1978, Earth-Moving Machinery – Seat Index Point (International Standard)

Publisher: American National Standards Institute, Inc. (ANSI), 11 West 42nd Street, New York, NY 10016

The following are related documents:

ASME B20.1-1996, Safety Standard for Conveyors and Related Equipment
ASME B30.9-1996, Slings
ASME B56.11.4-1992, Hook-Type Forks and Fork Carriers for Powered Industrial Forklift Trucks (not a safety standard)

Publisher: The American Society of Mechanical Engineers (ASME International), Three Park Avenue, New York, NY 10016-5990

ANSI/ITSDF B56.6 INTERPRETATIONS

Replies to Technical Inquiries
July 2011 through May 2016

FOREWORD

This publication includes all of the written replies issued between the indicated dates by the Secretary, speaking for the ANSI/ITSDF B56 Committee of Powered and Nonpowered Industrial Trucks, to inquiries concerning interpretations of technical aspects of ANSI/ITSDF B56.6, Safety Standard for Rough Terrain Forklift Trucks.

These replies are taken verbatim from the original letter except for a few typographical corrections and some minor editorial corrections made for the purpose of improved clarity. In some few instances, a review of the interpretation revealed a need for corrections of technical nature; in these cases a corrected interpretation follows immediately after the original reply.

These interpretations were prepared in accordance with the accredited ITSDF procedures. ITSDF procedures provide for reconsideration of these interpretations when and if additional information is available which the inquirer believes might affect the interpretation. Further, persons aggrieved by this interpretation may appeal to the cognizant ITSDF Committee or Subcommittee. ITSDF does not “approve,” “certify,” “rate,” or “endorse” any item, construction, proprietary device, or activity.

Interpretation: 6-27

Subject: ANSI/ITSDF B56.6-2011, Section 8.8.4 Parking Brake Performance for Rough Terrain Forklift Trucks Up to and Including 70,000 lb (31 750 kg) Loaded Truck Weight

Date Issued: November 4, 2011

Question (1): What is the applicable standard, protocol, or procedure used to perform the parking brake application force test? There is a requirement for the parking brake application force to be 69 lb or less, but no test standard cited or referenced stating how to perform the test.

Answer (1): No specific method for determining the force is included in the standard.

Question (2): The parking brake handle usually moves in an arc so applying a force in an arcing motion is problematic. Does this 69 lb requirement apply throughout the arcing motion or just at the end of the stroke when the parking brake actually engages?

Answer (2): The 69 lb force is the maximum force that can be applied to attain the required parking brake performance with a hand lever

Question (3): Should the last word in section 8.8.4 be “lever” rather than “level”?

Answer (3): Yes.

Interpretation: 6-28

Subject: ANSI/ITSDF B56.6-2011, Section 8.16.3 (c), Overhead Guards, Impact Drop Test

Date Issued: April 9, 2013

Question (1): Is the purpose of the impact drop test to protect the operator? How are we protecting the operator if the 39" vertical clearance is not maintained during impact?

Answer (1): The impact drop test measures the *performance* of the overhead guard. The intent of the wording in the standard is to ensure an operator has enough room to escape entrapment in the event an overhead guard is deformed to the maximum allowable extent. As stated in 5.4.1.2, an overhead guard is intended to offer protection to the operator from falling objects, but it cannot protect against every possible impact.